Louisville

Hurstbourne Transportation Study and Small Area Plan

October, 2006

Acknowledgements

Metro Louisville

Julie Raque Adams, District 18 Councilwoman

Task Force

Dan Curtis, Metro Public Works
Ed Dahlem, Commissioner, City of Hurstbourne
Marty Dunn, Commissioner, City of Hurstbourne Acres
Karen Bischof, resident, City of Hurstbourne
Chuck Kavanaugh, resident, City of Hurstbourne
Dick Kline, president, Old Dorsey Place
Shellie May, representative, St. Margaret Mary
John S. Osborne, Jr. Wyatt, Tarrant & Combs
Larry Owsley, representative, University of Louisville
Chris Phillips, Metro Public Works
Lois Wagner, Commissioner, City of Hurstbourne
Judy Sikes, Commissioner, Bellemeade
Mike Kuzmich, TARC
Paula Wahl, Transportation Engineer, Louisville Metro Planning And Design Services
Jeff Wolfe, KYTC

Staff

Mohammad Nouri, Assistant Director, Louisville Metro Planning and Design Services
Aida Copic, Planning Coordinator, Louisville Metro Planning and Design Services
Ken Baker, Planning Supervisor, Louisville Metro Planning and Design Services

Consultant

Gresham, Smith and Partners
101 S. 5th Street, Suite 1400
Louisville, KY 40202

Table of Contents

i. Acknowledgements
ii. Table of Contents

1. **Introduction**
   - **a.** Background/Purpose
   - **b.** Process Overview
   - **c.** Inventory
   - **d.** Analysis
   - **e.** Public Participation

2. **Vision Statement**
   - **a.** Introduction
   - **b.** Vision Statement

3. **Neighborhood Identity**
   - **a.** Introduction
   - **b.** History
   - **c.** Demographics
   - **d.** Defining Characteristics
   - **e.** Inventory/Analysis
     - **1)** General
     - **2)** Neighborhood Specific
     - **3)** Corridor Specific
   - **f.** Aerial Photography

4. **Land Use**
   - **a.** Introduction
   - **b.** Form Districts
   - **c.** Density and Zoning
   - **d.** Residential Uses
   - **e.** Office Uses
   - **f.** Commercial Uses
   - **g.** Institutional Use
   - **h.** Area Pattern and Form
     - **1)** Neighborhoods
     - **2)** Corridors
     - **3)** Form Districts

5. **Mobility**
   - **a.** Introduction
   - **b.** Major Roadway Improvements
   - **c.** Spot Roadway and Intersection Improvements
   - **d.** Neighborhood Improvements
   - **e.** Access Management
   - **f.** Multimodal Possibilities
     - **1)** Transit
     - **2)** Bicycle Facilities
     - **3)** Pedestrian Facilities

6. **Community Character**
   - **a.** Introduction
   - **b.** Corridors
     - **1)** Character Districts
     - **2)** Nodes
   - **c.** Neighborhoods
   - **d.** Gateways
   - **e.** Oxmoor Farm
   - **f.** Shelby Campus

7. **Plan Implementation**
   - **a.** Introduction
   - **b.** Land Use Recommendations
   - **c.** Mobility Recommendations
   - **d.** Community Character Recommendations

8. **Appendix**
   - **a.** Traffic Study

Table of Contents

Chapter 1 :Introduction

Introduction

Eastern Jefferson County has experienced an extended period of rapid growth over the last 4 decades. Arguably, some of the most aggressive growth has taken place along Shelbyville Road, a major east-west arterial, and Hurstbourne Parkway, an arterial ring road circumscribing roughly two thirds of the county. The Hurstbourne area, located at the intersection of these two arterial roadways, has emerged as a Louisville "edge city".

Edge city is a term credited to Washington Post writer Joel Garreau in 1991, referring to the relatively new transformation of what was recently a residential suburb or semi-rural community into a concentration of business, shopping and entertainment uses.

The Hurstbourne Area Transportation Study and Small Area Plan specifically focuses on Shelbyville Road from Interstate 264 (Watterson Expressway) east to Moser Road, and; Hurstbourne Parkway, from Taylorsville Road north to Ormsby Station Road. The transportation study also considers the impact of the Hurstbourne Parkway/ Westport Road intersection and the proposed Westport Road/I-264 interchange. The Small Area Plan includes Hurstbourne, a 4th class suburban city, as well as the land area immediately adjacent to the Hurstbourne and Shelbyville Road corridors, containing portions of the Bellemeade, Wildwood, Blue Ridge Manor, Hurstbourne Acres, and Forest Hills neighborhoods. The study area also takes in the University of Louisville Shelby Campus and Oxmoor Farm, two large tracts planned for future development.

Background/Purpose
The Hurstbourne area developed in response to an expanding residential base and a ready-made arterial roadway system that provided convenient interstate access. The once rural area quickly grew as both Shelbyville Road and Hurstbourne Parkway were improved to carry increasing trips. Early subdivisions were joined by large-scale mixed use projects such as Hurstbourne and Plainview. Linear commercial and office development quickly followed, making this area one of the most significant economic centers outside the central business district of downtown Louisville Metro.

This growth however, has come at a price. The area is now considered to be one of the most highly traveled in Louisville Metro, placing tremendous pressure on the entire roadway network. Heavy arterial traffic volumes combined with increasing volumes and speeds on collector and local roadways has impacted the quality of life for the area's established residential communities. The numerous land uses found in the Hurstbourne area have been developed at different times and under different regulations resulting in a piece-meal pattern lacking unifying elements and a sense of place. Pending development of both the Oxmoor Farm and Shelby Campus, coupled with dispersed infill development and on-going redevelopment will only exacerbate the existing transportation and land use issues facing the Hurstbourne area.

The need for a transportation study and small area plan originated from concerns raised by area residents over additional planned developments within this already congested area -- in particular plans for developing the 386 acre Oxmoor Farm and the University of Louisville's Shelby Campus. The purpose of the Hurstbourne Area Transportation Study and Small Area Plan is to analyze traffic, mobility, safety and land use conditions and recommend opportunities for improvement.

Figure A: Study Area Map

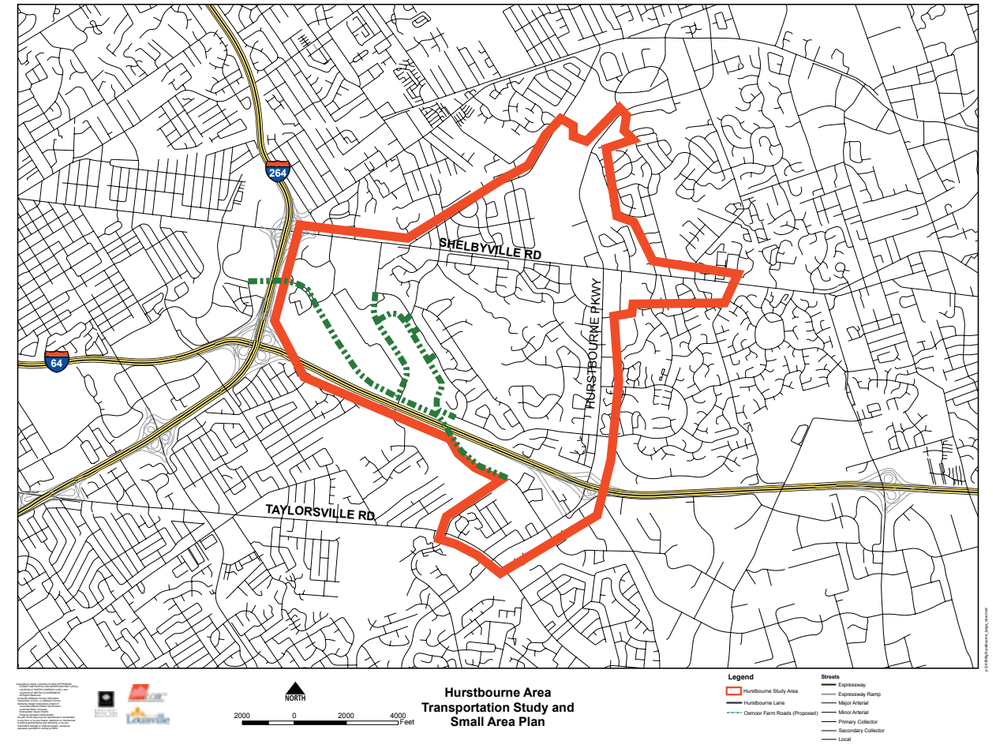

Process Overview
The process for Small Area planning in Louisville Metro is based on procedures established by the Metro Council and set forth in the Louisville Metro Code of Ordinances, Title XV, Chapter 161, Neighborhood Development Plans. The Code of Ordinances contains language broadly outlining the purpose and process for neighborhood planning.

Small Area planning is administered through Louisville Metro's Department of Planning and Design Services (P&DS). A Small Area Plan provides additional goals, policies, guidelines, supporting analysis, and programs for implementation that detail and are consistent with, Cornerstone 2020 on a local level. It will provide the means by which plan area stakeholders can identify their unique issues, analyze the situation, and set priorities. P&DS staff has expanded and refined the procedures outlined in the municipal Code of Ordinances and produced a document referred to as the Neighborhood Planning "Toolkit". The Toolkit outlines specific procedures for the drafting, adoption and implementation of the neighborhood or small area plan.

Each small area plan is required to include certain basic plan elements. These elements include a neighborhood identity narrative, a vision statement, a land use/ community form component, a mobility component, a plan implementation section, and an executive summary. The plan may also contain optional components to address issues unique to each neighborhood such as housing, economic development, community facilities/services, open space/recreation, urban design, historic preservation, and environmental resources.

District 18 Councilwoman Julie Raque Adams initiated the Hurstbourne Small Area Plan process in the fall of 2004 at the urging of concerned area residents and City of Hurstbourne officials. On November 1, 2004 The Study Advisory Team (SAT) was formed, which included representatives from a variety of interest groups including neighborhood representatives, residents, business owners, and area institutions. The role of the SATwas to frame issues, provide local knowledge, and offer feedback to the consultant. The SAT also served as the connection between the planning process and the general neighborhood, promoting the final recommendations of the plan to other area residents and local decision-makers.

Gresham, Smith and Partners (GS&P) was selected in early Spring of 2005 to serve as the project transportation and planning consultants. GS&P met with P&DS staff and the SAT members throughout the course of the project.

Inventory
The project began by compiling an inventory of physical, cultural, and socioeconomic information on the Hurstbourne Study Area to assist in the transportation study and small area plan process. Information was collected from various sources including traffic counts, census data, the Louisville/ Jefferson County Information Consortium (LOJIC) maps, existing traffic studies, and field observations made from walking and driving the study area. Existing conditions were gathered through field observations including housing/ building types, building setbacks and massing, pedestrian and vehicular facilities, condition of infrastructure and general development patterns.

Interviews with key stakeholders including SAT members were also conducted as part of the inventory process. A summary of the stakeholder interviews can be found in Appendix A.

Analysis
An extensive traffic analysis of the study area was performed to evaluate the capacity of the existing roadway network and make recommendations for future improvements. The traffic study, in its entirety, can be found in Appendix B. A physical analysis was also completed for both major roadway corridors—Shelbyville Road and Hurstbourne Parkway, as part of the planning process to examine the character and visual quality of the roadways. Inventory/Analysis maps for each corridor are found in Chapter 3. The appropriateness of current Form District and Zoning District designations was also analyzed within the study area, considering existing and anticipated development patterns.

The planning process concluded with specific recommendations for the Hurstbourne area relative to each of the Small Area Plan components.

Public Participation
Public participation is a critical component of the small area planning process, providing opportunity for input and feedback from all area stakeholders. Public input for the Hurstbourne Area Plan came in a variety of forms. Regular meetings with the SAT were held to provide feedback throughout the planning process. In addition to the SAT meetings, a series of public open houses and neighborhood workshops were held at key milestones of the planning process to present concepts and findings:

November 1, 2005 – Open House
November 8, 2005 – Neighborhood Workshop with Hurstbourne
November 13, 2006 – Open House

The public process concluded with the final plan presented to the Louisville Metro Planning Commission at a public hearing, where a recommendation was made to the Louisville Metro City Council for adoption.

Public Meeting 2005

SAT Meeting

Vision Statement

Introduction

A vision statement is a written expression of a community's aspirations, conveying hopes and intentions for the future. Drafted early in the planning process, it is used as a yard stick to measure the suitability of all plan recommendations.

The vision statement for the Hurstbourne Small Area Plan was developed by the SAT, using a planning technique facilitated by the project consultant to help motivate discussion. Using a process known as the nominal group method, SAT members formulated and prioritized thoughts pertaining to a future Hurstbourne area. These individualized statements were edited for clarification and completeness, then combined, where appropriate, and organized relative to the three plan elements---land use, mobility, and community character. Finally the individual statements were assembled into the following collective vision statement:

Vision Statement

In the year 2025, the Hurstbourne area has become a community that is recognized for its diverse and vibrant centers, stable neighborhoods, community design, and high quality of life.

Bunsen Parkway has been constructed along with the Blowing Tree Way extension to Taylorsville Road. The Hurstbourne and Shelbyville corridors have become parkways in form and function with less linear development and more defined centers. An appropriately designed streetscape that respects the neighborhood character of the area has become equally as important as the need for a safe, functional roadway. Hurstbourne has moved towards a walkable community creating, livable, unified, high quality street environments. Sidewalks and bike paths have been incorporated into new developments, creating a viable bicycle and pedestrian network throughout the area making recreational facilities including the area's park system, more accessible. The street network has become "user friendly" for all ages. The City of Hurstbourne has taken active control of its own future to improve traffic and quality of life in the city. Traffic has been relieved on all corridors in the area through a variety of improvements including sound access management, allowing shoppers and employees to travel with ease without adversely impacting area residents. Proper use of traffic control and safety devices combined with sufficient enforcement of traffic regulations has reduced accidents and improved traffic flow. The area is served by a highway network that effectively balances safety and efficiency while cut-throughs has been minimized in residential areas. Safe and efficient access from Oxmoor Mall and St. Matthews Mall has also been developed.

The Hurstbourne area is still the center of regional activity, providing retail and employment opportunities while providing a range of housing options including a reinvented "Town Center" with a residential component. The individual needs of all users (commercial, residential, institutional, etc.) have been distinguished and are respected. A vibrant neighborhood quality of life has been maintained through an expanded residential base led by the development of Oxmoor Farm where single family and multi-family for sale and for rent products have been appropriately balanced. Sound land use planning had provided the opportunity for residents to meet their daily needs without having to leave the immediate area, including a mix of uses targeting an aging population. The Filson Club has become an important voice in preserving and protecting the character of the area, having taken occupancy of the historic home and preservation tract on Oxmoor Farm.

Community Design plays an important role in all development in the Hurstbourne study area. The area has established a strong identity defined by its unified neighborhoods and its collection of well designed mixed use institutional, retail, and office developments such as University of Louisville's Shelby Campus and Oxmoor Farm. The area has become focused on aesthetics including its road corridors and promoting a mix of architectural styles to help create community character. The open space network envisioned in the Oxmoor Farm master plan has begun to take shape with a greenway trail along Beargrass Creek connecting and helping unify the area's varying land uses. Protections have been provided to create a quiet, peaceful environment within residential areas.

Neighborhood Identity

Introduction

Every community has a history, which helped shape and define it. Looking at the history of the Hurstbourne area and how it developed can begin to define its "identity" by providing an understanding of its character and context as it exists today.

History

The contiguous land holdings that make up the Hurstbourne study area are an assembly of historic farms that have been developed over time into a collection of unique neighborhoods and master planned communities linked by the Hurstbourne and Shelbyville Road corridors.

Hurstbourne

The development of "stations" or stockades along Beargrass Creek, in the late 18th Century, marked the arrival of the white man to this region as part of a national westward expansion. The Hurstbourne Country Club is located on the original site of Lynn's Station, probably one of the first stations established in the area. The location of Lynn's Station was chosen for the fertile land and a large spring which fed into Beargrass Creek.

In 1784, Richard Clough Anderson moved to Kentucky and settled on the land at Lynn's Station. He referred to the property as Soldier's Retreat. The estate was purchased in 1949 by the Highbaugh family and became Highbaugh Farms. In 1965, the Highbaugh's started to develop the estate into a community to be known as Hurstbourne, with plans for a shopping center, offices, schools, churches, and a country club complex. The streams, creek beds, and other natural features, as well as the site of Lynn's Station, its springhouse, the Anderson graveyard and old stone out-buildings, have been thoughtfully preserved and carefully incorporated into the long range planning for Hurstbourne at the request of L. Leroy Highbaugh, Jr.

With the building of I-64 along the area's southern boundary, development in Hurstbourne expanded quickly. In 1958 the Watterson expressway was completed from Shelbyville Road to Dixie Highway. The quick access to Louisville encouraged commercial, as well as residential, growth. In 1960 the St. Matthews Mall opened followed by the Oxmoor Mall in 1970. In August 1982 the City of Hurstbourne was incorporated.

Oxmoor Farm

The Bullitt Farm, built in 1787 by Alexander Scott Bullitt, originally contained 1000 acres and has remained in the Bullitt family since the land was originally claimed. He named the farm Oxmoor, after the fictional farm in the celebrated novel *Tristam Shandy* by Laurence Sterne. In 1927, the Olmsted firm was retained to devise a parkway from Cherokee Park to Oxmoor with the intention of developing the 1000-acre tract in the future. In 1963, such a plan was prepared, and the Oxmoor Center and other property along Shelbyville Road were developed. In 1991, Thomas Walker Bullitt deeded a 79 acre scenic easement to the Commonwealth of Kentucky for use by The Filson Historical Society to promote the study and understanding of history. In 2002, a plan for the remainder of the farm property was adopted that included future retail, office and residential uses with a heavy emphasis on creating a community that is sensitive to the historical and natural context of the land.

Shelby Campus

The approximately 232 acres that today makes up the University of Louisville's Shelby Campus, was previously part of the Highbaugh family farm. Mr. Highbaugh sold the land to Greater Louisville College Campaign Committee to become the site of the Kentucky Southern College, which opened in 1961. In 1969 financial difficulties forced the college to close and transfer its assets and liabilities to the University of Louisville.

Demographics

Demographic information compiled for this study was derived from the 2000 Census for the City of Hurstbourne, Hurstbourne Acres, Bellemeade and Wildwood. It should be noted that the Census data boundaries, while representing a majority of the population from the study area, do not correspond exactly with the boundary established for this study (Figure A: Study Area Map).

Population: The population in the Hurstbourne Study Area has remained constant over the last ten years. Total population is estimated at 6,506 persons (3131 households, with an average household size of 2.17 persons). The median age for the study area is 46.08.

2000 Census, Population

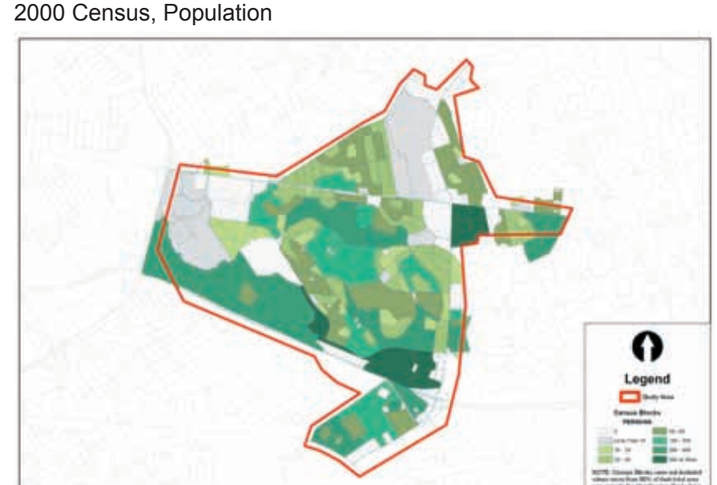

Personal Income: The median household income for the study area is $60,952, which is significantly higher then the median household income for Jefferson County ($39,457). 11% of the population receives retirement income as their primary source of income.

Housing: There are 3,504 housing units within the study area, 11% of which are vacant. 62% of the housing units are owner occupied, which is comparable to the County average of 65%.

Transportation: 52% of area residents are commuting to work by some means of transportation. The overwhelming majority (85%) of commuters in the study area drove alone in a car, truck or van. 5% of area commuters carpooled while 6% worked from home. Only a small percentage of the population (less than 2%) used an alternative mode of transportation such as public transportation, walking or bicycling to work.

Defining Characteristics

The study area can be described as a series of distinct sub-areas, each with its own set of defining characteristics: The Shelbyville Road corridor; the Hurstbourne Parkway corridor; the neighborhoods of Hurstbourne, Wildwood, Bellemeade, and Hurstbourne Acres; the University of Louisville Shelby Campus; as well as the future development of the Bullitt Farm each have a unique character that defines them. Understanding these defining characteristics is an important step in planning for the area's future growth and redevelopment.

Shelbyville Road

In the 1960's and 1970's development of Oxmoor Center, residential increases in the City of Hurstbourne and additional residential communities began to change the rural character along Shelbyville Road. Residential buildings still remain along Shelbyville Road but the streetscape is comprised of a mix of commercial and residential uses. Where Shelbyville Road intersects with the Watterson

Expressway and with Hurstbourne Parkway commercial uses are regional draws separate from the neighborhoods that surround the area. The automobile is relied on for movement around the study area with little pedestrian access.

The existing residential properties along the Shelbyville Road corridor are unique in character with large setbacks, giving the area a residential feel. Large trees lining Shelbyville Road, roadside drainage typical of a more rural area, and frequent curb cuts for driveway access to Shelbyville Road add to this suburban feel.

Hurstbourne Parkway

The northern section of Hurstbourne Parkway, from Dorsey Lane to Shelbyville Road is predominantly a mix of mid-rise office buildings and retail uses. This portion of the corridor is largely access controlled, limiting the number of curb cuts directly onto Hurstbourne. Large setbacks have been maintained for much of this section of Hurstbourne Parkway. Berms and additional landscaping have been consistently required, helping to screen parking lots and vehicular circulation around new development in this area.

The character of Hurstbourne Parkway changes south of Shelbyville Road. Commercial uses with much shallower setbacks dominate the character of the corridor where it intersects with Shelbyville Road (north) and Interstate 64 (south). Multiple curb cuts, signage with varying heights and sizes and expansive parking lots with minimal screening add to the heavy commercial focus. Mature trees and an abundance of green space are incorporated in the residential section of the City of Hurstbourne where it abuts Hurstbourne Parkway. This brings some of the parkway character shown in the northern portion of Hurstbourne Parkway to this stretch of roadway.

The Neighborhoods

Hurstbourne, Wildwood, Bellemeade, Hurstbourne Acres and portions of Blue Ridge Manor all fall within the boundaries of the Small Area Plan. The City of Hurstbourne saw the majority of its growth through the late 60's and early 70's. The city began as a single-family subdivision designed around a golf course with a town center at the northeast corner of the property. Houses front on large, landscaped boulevards that curve around the development. The extensive amount of mature vegetation along the roadway and throughout the city is an important part of Hurstbourne's identity. The implementation of neighborhood deed restrictions ensured consistency throughout the neighborhood with street elements such as mailboxes. There are a high number of institutional uses within the city limits. The large footprint of the churches and school and their associated parking impact the character of the city physically as well as culturally.

Wildwood, Bellemeade and Blue Ridge Manor were developed in the 1950's as residential subdivisions. The mature vegetation in these neighborhoods contributes heavily to the residential feel of the neighborhoods. The curving streets with roadside drainage and street trees separate these neighborhoods from the commercial uses. The narrow street widths and lack of curb and gutter typical of suburban development add to the more rural subdivision feel of these neighborhoods. Unlike the previously mentioned communities, Hurstbourne Acres contains a mix of uses. Retail uses are located along Hurstbourne Parkway. There is an office component located along Bunsen in the north of the community. Multi-family development buffers the single family homes from heavily traveled Taylorsville Road. The single family areas of Hurstbourne Acres were laid out in more of a grid pattern. Like the residential communities of Wildwood, Bellemeade and Blue Ridge Manor, there is a strong sense of character created throughout Hurstbourne Acres by the canopy of the mature trees throughout.

Inventory/Analysis

Physical data was obtained from LOJIC (Louisville/Jefferson County Information Consortium) and supplemented with field data to prepare base mapping for the study area. Field data included gathering information on sidewalks (and their condition), drainage, curbing, roadway signage, business signage, lighting, pedestrian crosswalks and signals (including location) and transit stops. General vehicular information was also gathered including lane markings, intersections, traffic signals, entrances and frontage roads.

The information gathered for the Hurstbourne Parkway corridor, the Shelbyville Road corridor and the neighborhoods was then analyzed. The existing vehicular and pedestrian systems were analyzed for gaps and inconsistencies. Safety issues were considered and problem areas were identified. Physical characteristics of each of the corridors and the neighborhoods were considered for their affect on neighborhood identity.

During the analysis stage distinct character districts began to immerge for each of the corridors. The inventory and analysis has been presented on the following pages for each of the character districts identified.

Character District Key Map

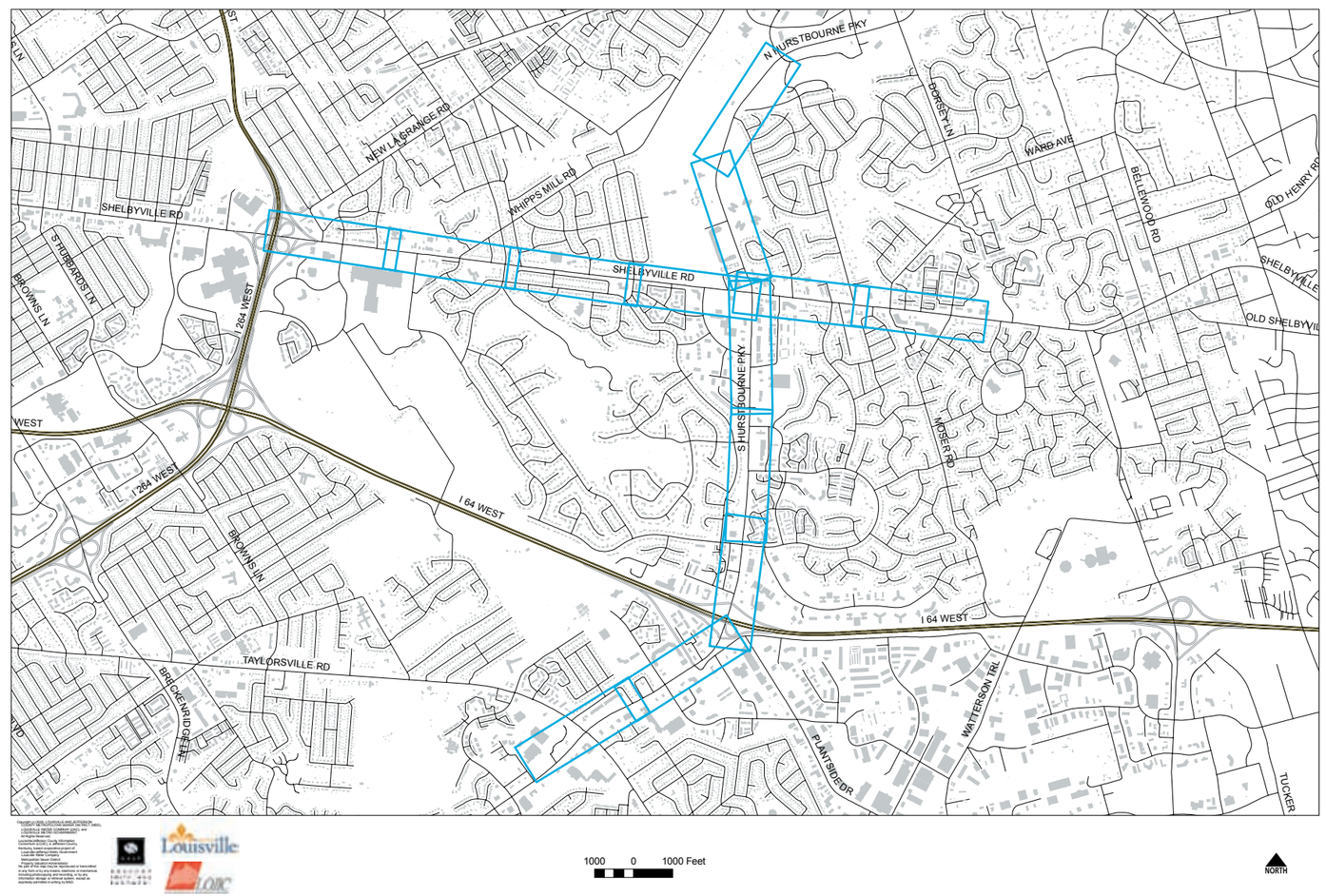

Chapter 3: Neighborhood Identity

Inventory/Analysis

Hurstbourne Parkway Corridor

Forest Green Blvd. to Shelbyville Rd. (Parkway segment)

Land Use
- Multiple properties are vacant with potential for development
- UofL Shelby Campus proposed development needs attention to transition between adjoining properties

Mobility
- Wide pavement width creating difficult pedestrian crossings
- Mass transit stops are provided but no sidewalks provided to connect uses along Hurstbourne to transit stops
- Wide paved shoulder may provide opportunity for dedicated bike lane
- Sight lines obstructed for many entrances from commercial uses to Hurstbourne near intersection of Shelbyville Road creating unsafe and confusing traffic flow

Community Character
- Large setback requirements and required berming and landscaping create a parkway atmosphere separating roadway and adjacent uses from vehicular impact
- Largely vehicular focus with destination points at each end of this Section not conducive to pedestrian travel from end to end

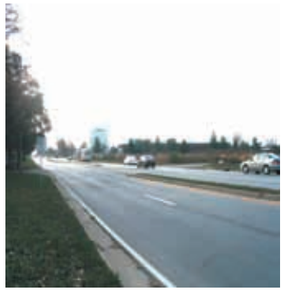

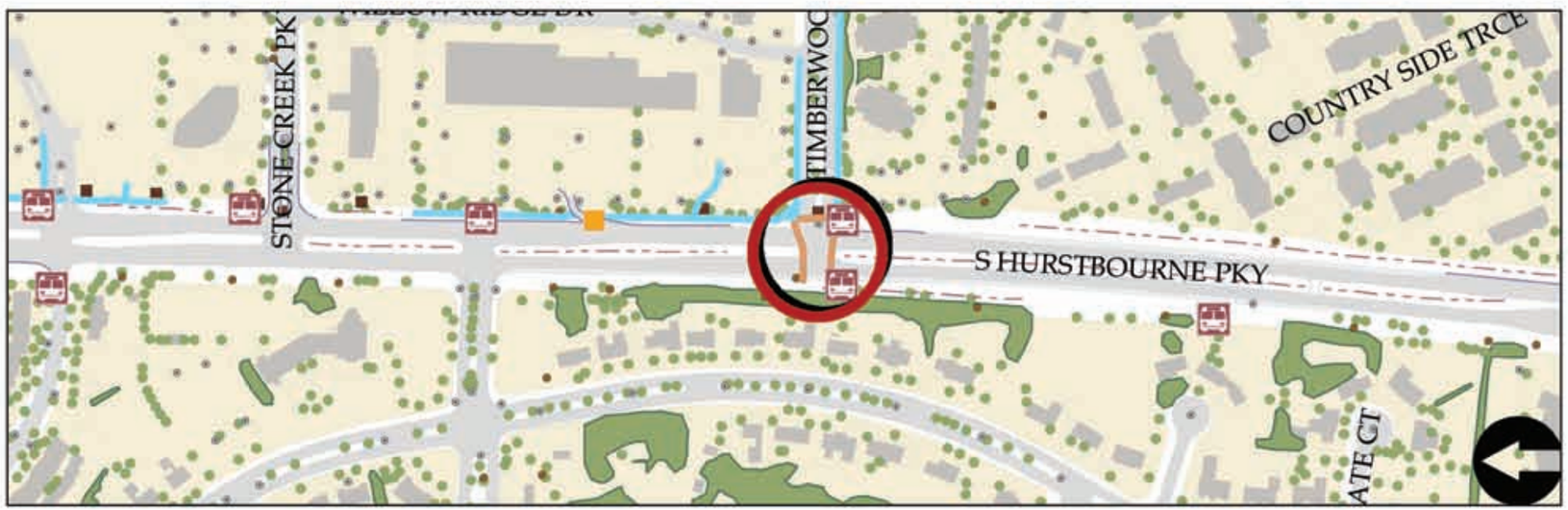

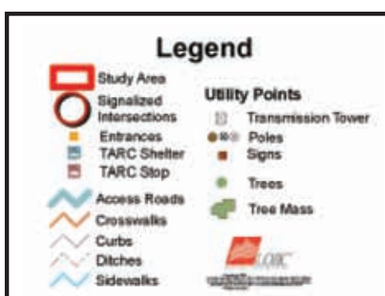

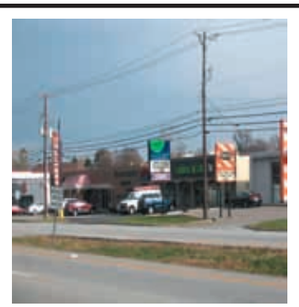

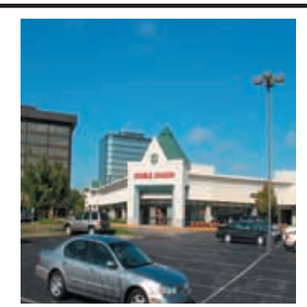

Hurstbourne Parkway Corridor

Shelbyville Rd. to Timberwood Circle (Suburban Mixed Use segment)

Land Use
- Opportunity to Create Town Center at the southwest corner of the intersection with Shelbyville Road – currently Town Center Form District
- Multi-family residential to the south of the Town Center Form District serves as good transition between town center and adjacent single-family housing

Mobility
- Wide pavement width creating difficult pedestrian crossings
- Multiple entrances to commercial uses near Shelbyville Road intersection conflict with traffic turn lanes at Shelbyville Road signal
- Multiple transit stops with no connecting sidewalks
- Heavy pedestrian use along Hurstbourne in this Section (pathways created where there are no sidewalks from pedestrian use)
- Limited access with access roads and entrances limited to Whittington Parkway provide good access management along west side of Hurstbourne Parkway at Shelbyville Road intersection

Community Character
- Heavier commercial/office use near Shelbyville Road intersection with larger setbacks and more residential use as progressing towards south along Hurstbourne provide a good transition between heavy commercial uses and residential uses
- Some areas of larger setbacks with berms and landscape screening (mainly along new development) begin to create parkway character

Hurstbourne Parkway Corridor

Timberwood Circle to Hurstbourne Lane (Suburban Mixed Use)

Land Use

- Neighborhood Form District extends to Hurstbourne Parkway between major roadway intersections
- Suburban Marketplace Corridor Form District Centered around interstate junction is appropriate use

Mobility

- Heavy vehicular focus
- Limited sidewalks with little connectivity between sidewalks
- Access road along east portion of Hurstbourne near intersection of I-64 West bound off-ramp provide good access management to multiple commercial uses
- Multiple entrances along west side of Hurstbourne near I-64 interchange

Community Character

- Narrow verges, overhead utilities, many signs, inconsistent curbing and disconnected street plantings lead to an inconsistent streetscape which is not pedestrian friendly

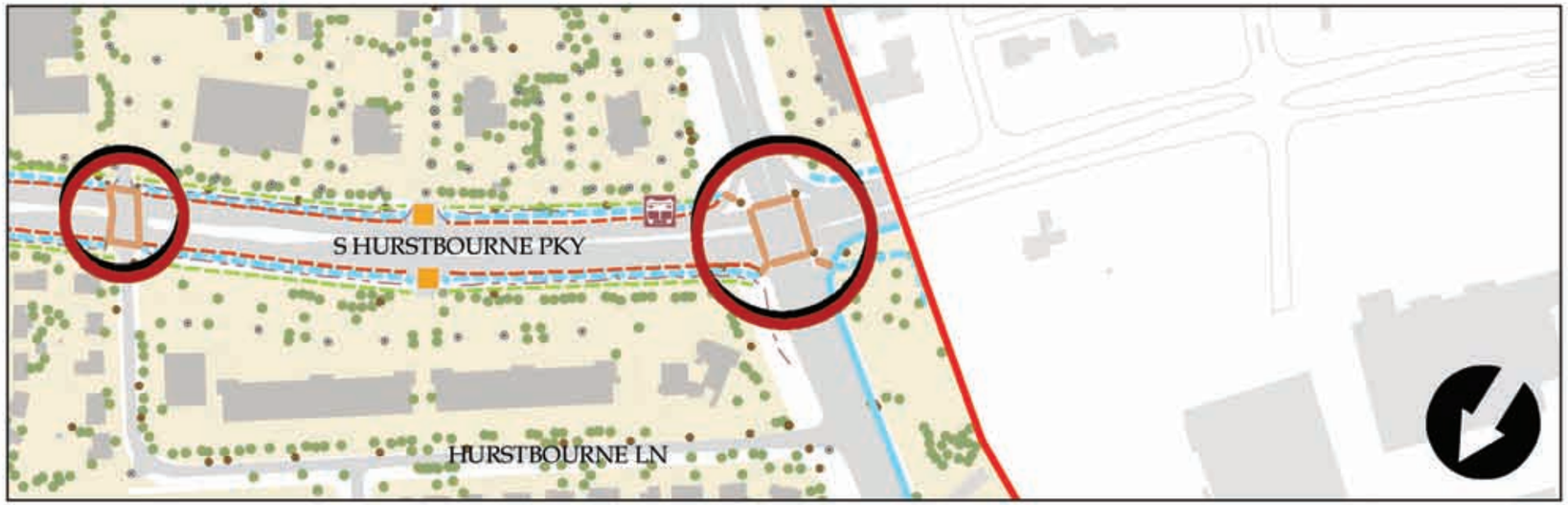

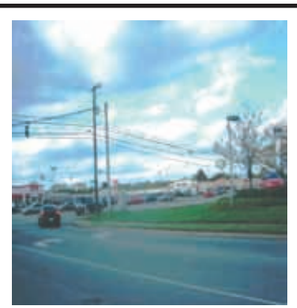

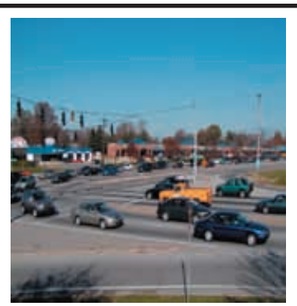

Hurstbourne Parkway Corridor

Hurstbourne Lane to Taylorsville Road (Suburban Commercial use segment)

Land Use
- Well established Suburban Marketplace Corridor Form District along Hurstbourne Parkway extending from the main intersections at the interstate and Taylorsville Road

Mobility
- Use of frontage roads and shared entrances creates good access management
- Lack of sidewalks with little connectivity for transit stops create an unfriendly pedestrian environment
- Wide paved shoulder may provide opportunity for dedicated bike lane

Community Character
- Open Parking Lots with little screening lack Parkway character
- Many areas with pathways worn along roadway due to lack of sidewalks
- Narrow verges, overhead utilities, many signs, inconsistent curbing and disconnected street plantings lead to an inconsistent streetscape character

Inventory/Analysis

Shelbyville Road Corridor

Watterson to Lyndon Lane (Commercial segment)

Land Use
- Proposed Oxmoor Development needs buffering and transition measures between adjoining properties
- Neighborhood Form District north of Shelbyville Road near the intersection of the Watterson Expressway appears to be established to comply with existing uses – this may not be the appropriate form district with close proximity to intersection of major roadways

Mobility
- Numerous entrances lead to poor access management
- Frequent signal intersections creates a longer wait at intersections

Community Character
- Exposed parking and numerous overhead utilities with a lack of street trees may distract motorists and decreases the roadside aesthetics
- Inconsistent verge (grass strip) widths may lead to a lack of pedestrian facilities (sidewalks, crosswalks, and transit shelters)

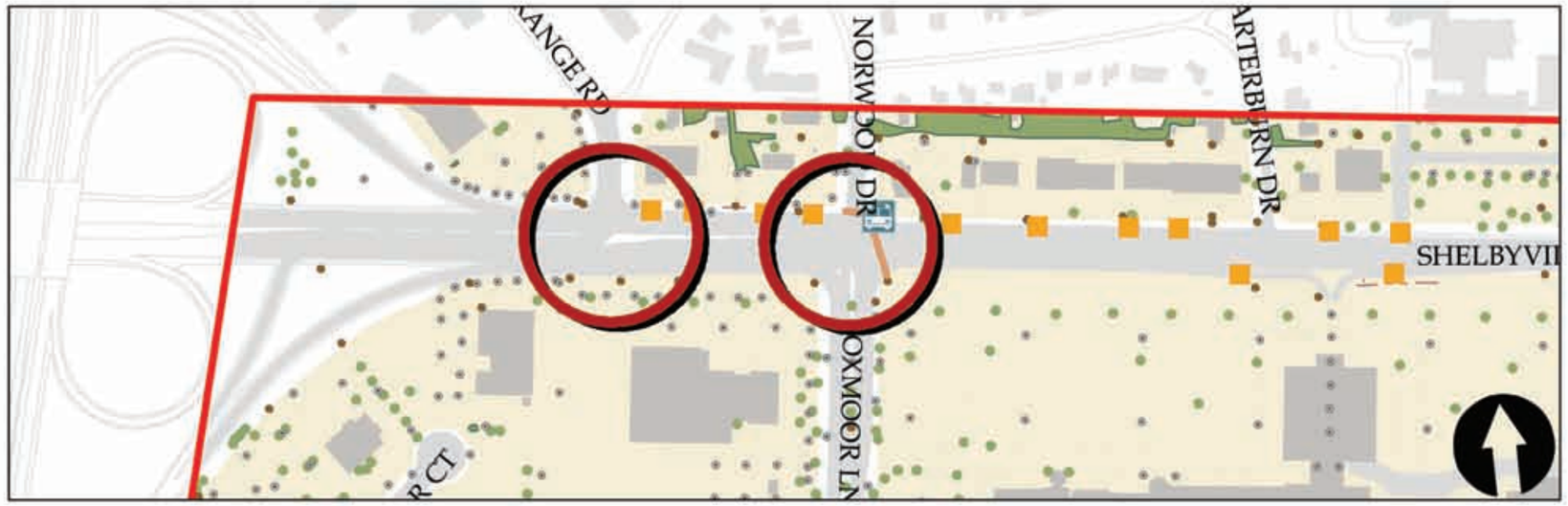

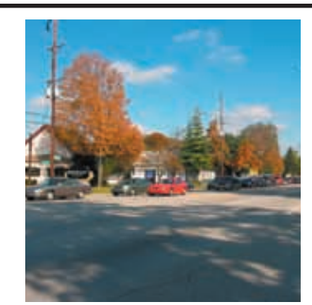

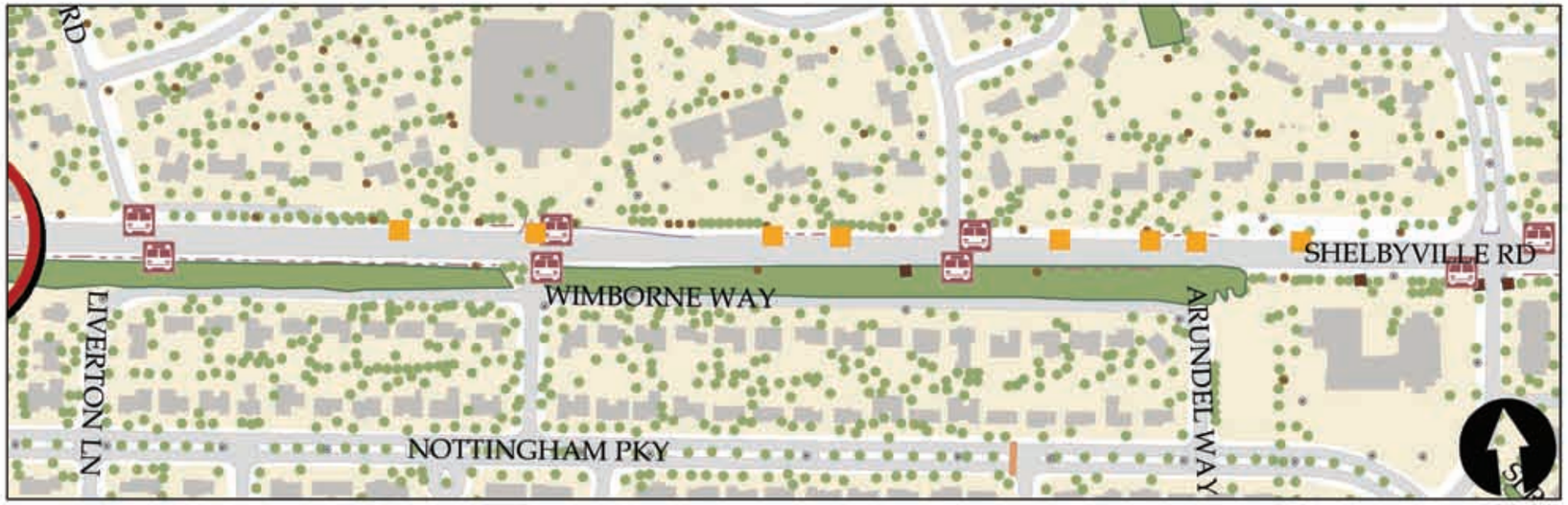

Shelbyville Road Corridor

Lyndon Lane to Hurstbourne Parkway (Residential use segment)

Land Use
- Existing Neighborhood Form District supports established residential neighborhoods as well as the neighborhood character of this portion of roadway

Mobility
- Use of frontage roads and discrete entrances creates good access management
- TARC stops and shelters allow for mass transit connections

Community Character
- Maple and Oak trees increase the visual quality of the roadside
- The rural section creates a character of wider setbacks to the residential segment

Shelbyville Road Corridor

Shelbyville Road / Hurstbourne Parkway Intersection

Land Use

- Town Center Form District south of Shelbyville Road at intersection of Hurstbourne Parkway is properly located as a node within the residential development
- Pedestrian connections need to be strengthened to provide multiple means of access to the town center by adjoining users

Mobility

- Numerous entrances lead to poor access management
- Short timing cycles at intersections and a lack of pedestrian facilities makes pedestrian travel harder

Community Character

- Narrow verges, overhead utilities, many signs, inconsistent curbing and disconnected street plantings lead to an uncoordinated streetscape

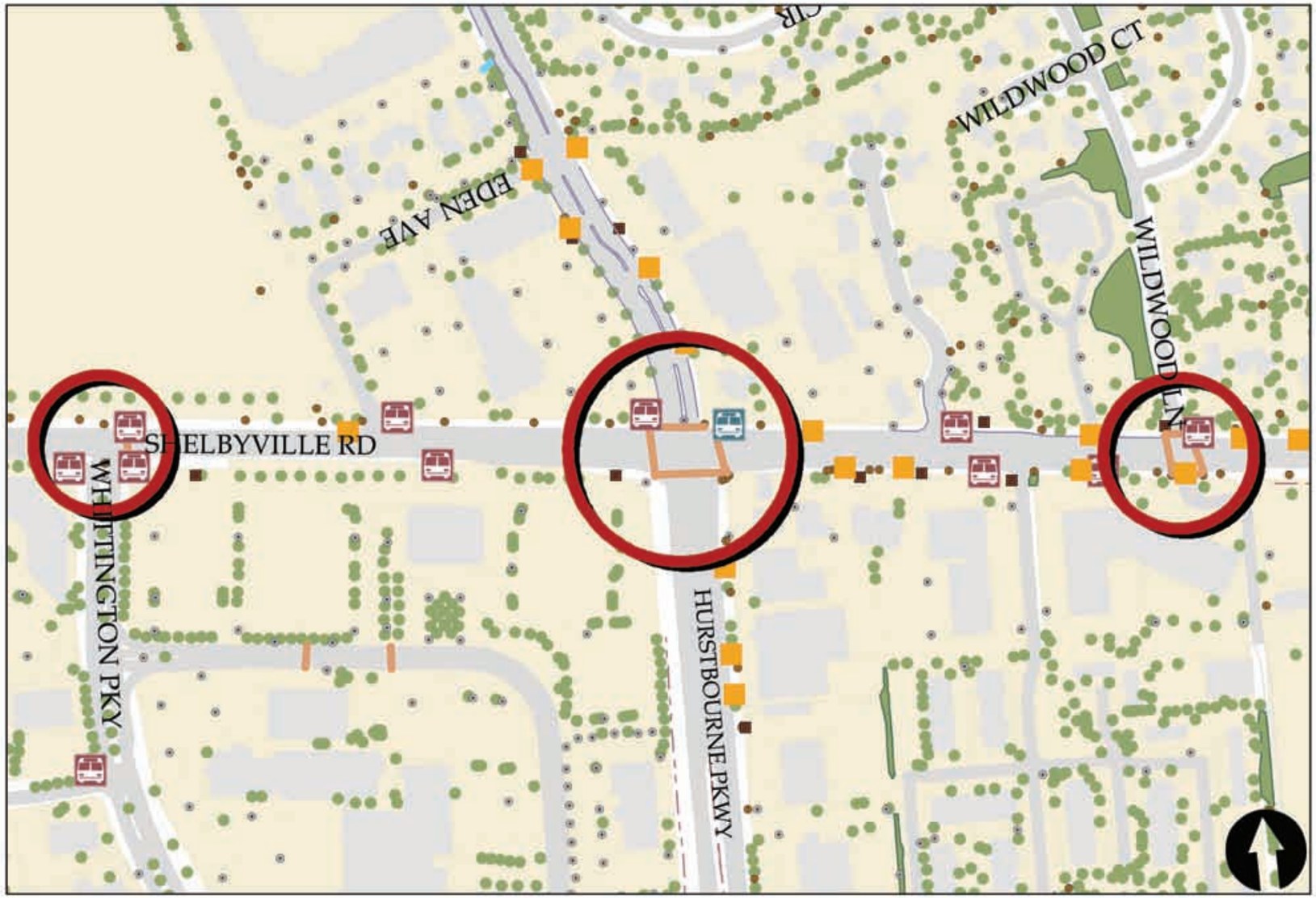

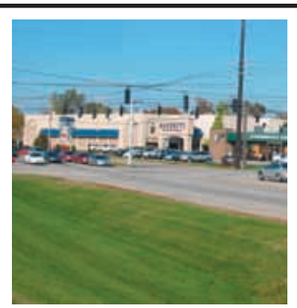

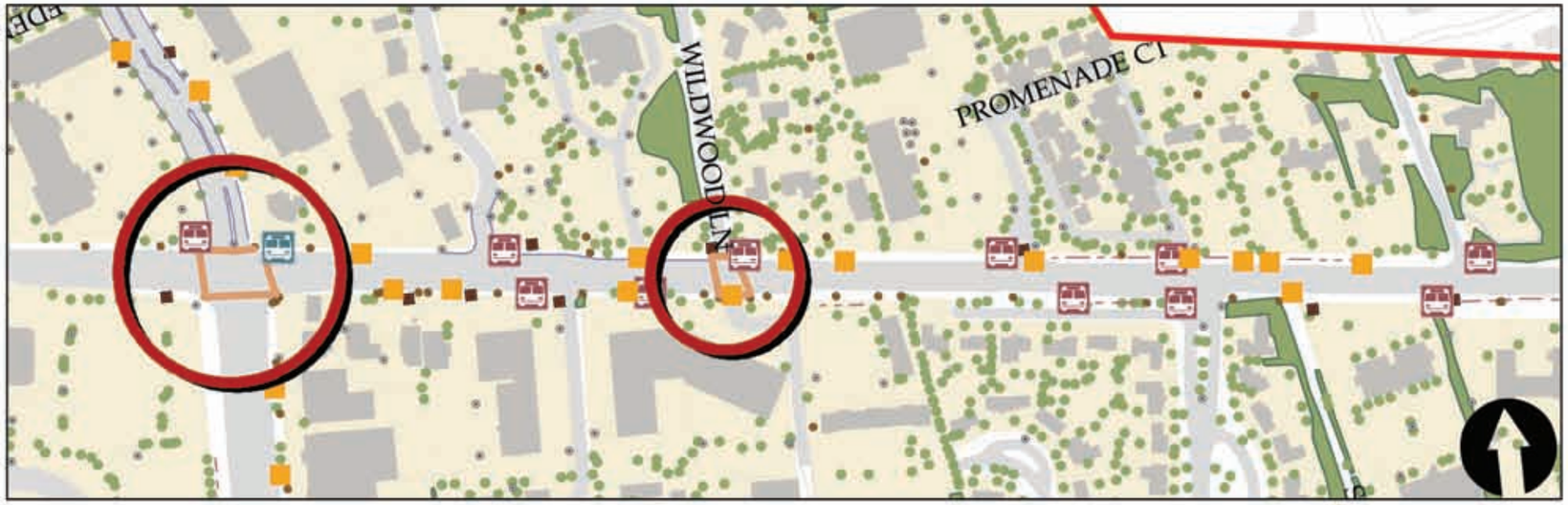

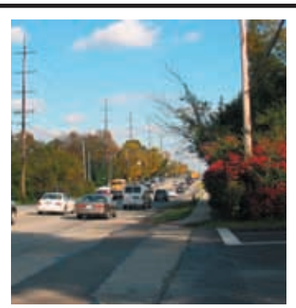

Shelbyville Road Corridor

Hurstbourne Parkway to Moser Road (Commercial, Office and Restaurant use segment)

Land Use

- Suburban Marketplace Corridor Form District north of Shelbyville Road along west side of Hurstbourne Lane seems out of context with surrounding Campus Form District
- Suburban Marketplace Corridor Form District along Shelbyville Road east of Hurstbourne Parkway appears to be a reaction to existing land uses and may not respond to adjoining Neighborhood Form District

Mobility

- Use of frontage roads and shared entrances creates good access management
- Inconsistent pedestrian facilities (sidewalks and transit stops/ shelters) makes pedestrian travel harder

Community Character

- Greater amount of topography in the road alignment and roadside condition
- The rural sections of roadway with inconsistent curbing, ditches and culverts creates a poor streetscape character

City of Hurstbourne

Land Use

- Institutional with much of the multi-family uses found at the city's perimeter
- The country club creates a vast green space in the center of the community
- The majority of the city is made up of single family, detached homes surrounding the country club

Mobility

- Larger road widths may encourage speeding
- Frontage roads collect residential traffic to specific access points along the major arterials
- Multiple transit stops can be found along Shelbyville Road and Hurstbourne Parkway
- A lack of sidewalks on the north portion of the city fails to create a pedestrian network for safe walking and running
- Wide pavement width creates difficult pedestrian crossings to the neighboring communities and uses

Community Character

- Large hardwood trees, like Oaks and Maples, positively affect the mature character of the city
- Substantial setbacks results in an open and green suburban streetscape
- Gateways into the neighborhood are not all marked as the use changes from a higher intensity to the single family less intense uses

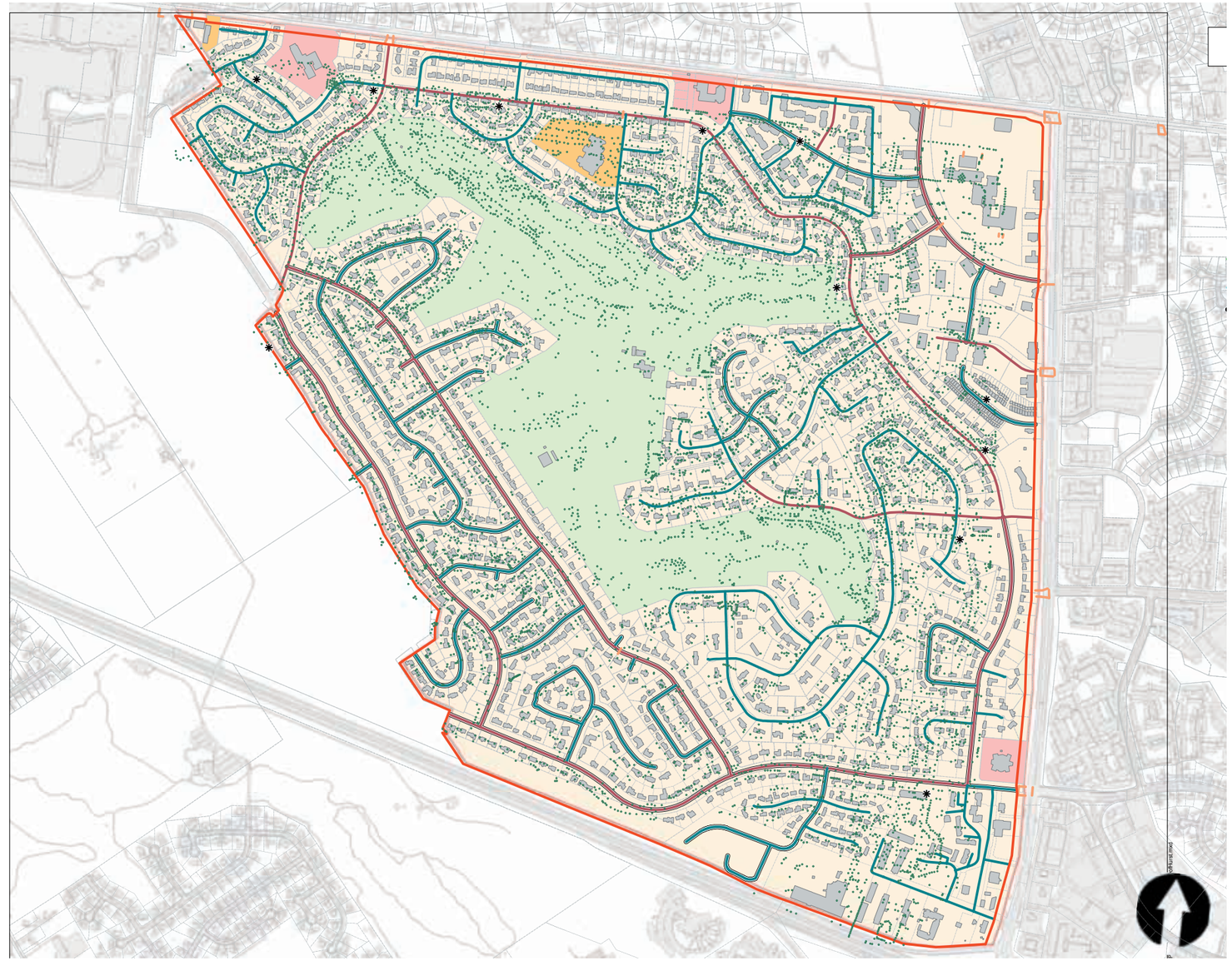

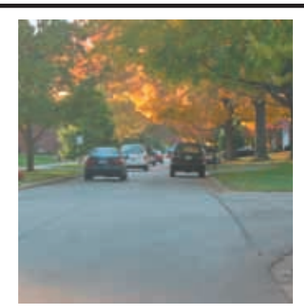

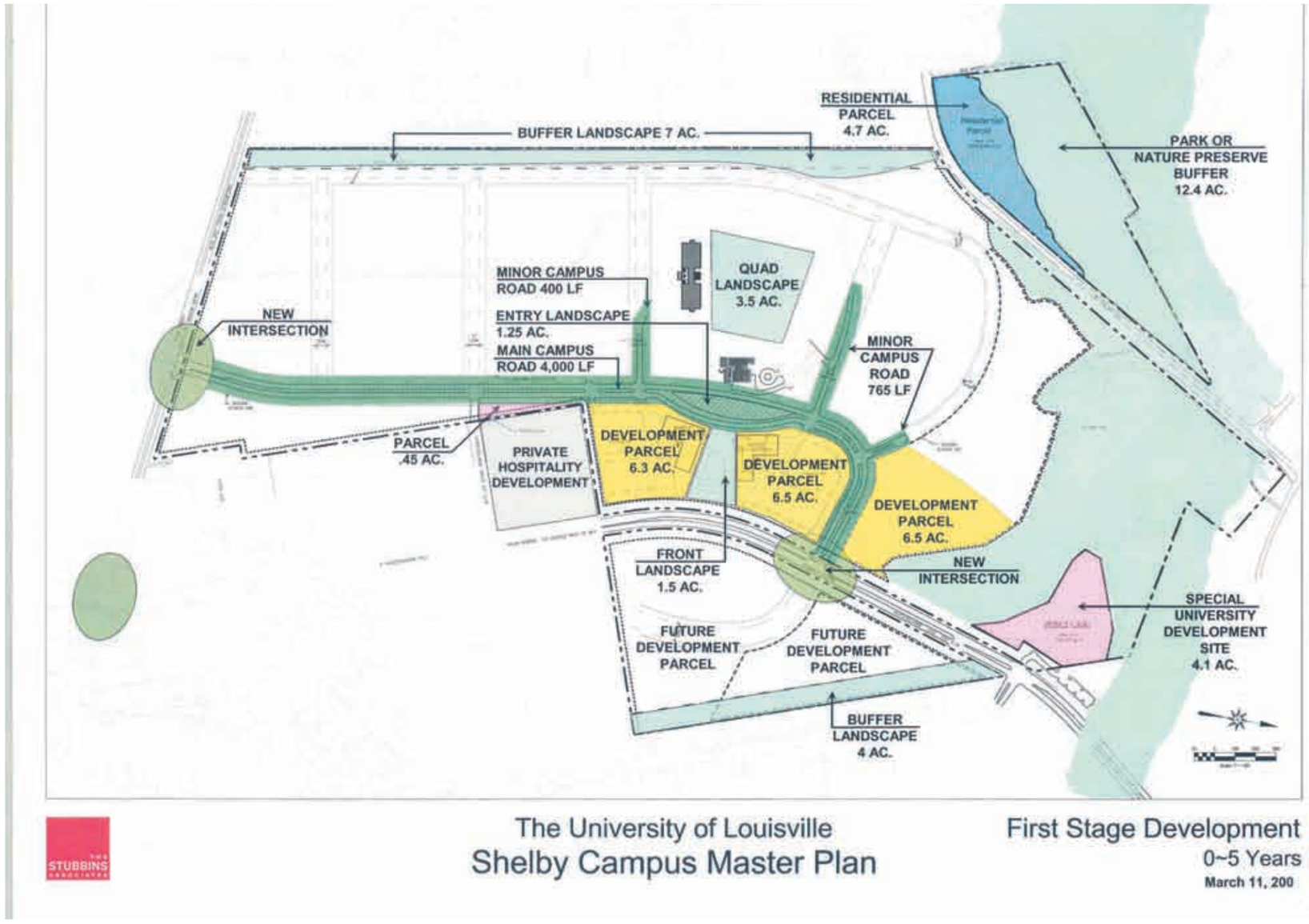

Shelby Campus

Land Use

- Future development is envisioned as a research and development campus meant to fulfill the university's mission
- Design criteria plans to be compatible with the neighbors
- Some existing structures will be incorporated into the quadrangle or center campus area

Mobility

- Grand entry boulevards are designed to intersect with the existing arterials in appropriate locations
- New development intended to be a creative walking environment

Community Character

- Future design criteria intends to hold a distinctive identity
- Buffers are shown along Beargrass creek and neighbors
- Future parks and recreation trails are planned

Oxmoor Farm Summary

Land Use
- Mixed Land Use proposed including residential, office, and retail component
- Office use adjacent to interstate locates large parking areas away from residential

Mobility
- Construction of approved plan will be done in phases which are tied to the construction of Bunsen Parkway
- Pedestrian connections throughout the development as well as to adjoining residential properties have been proposed

Community Character
- Preservation easement establishes a large open space for nearby residents
- The layout preserves the historical and environmental assets remaining on the Farm
- Progression from village center to town center residential and multi-family residential with single family residential adjacent to existing single-family residential and the open green space in the center begin to establish the village character planned for the Farm

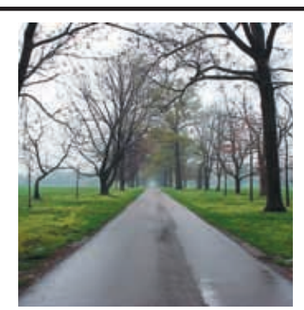

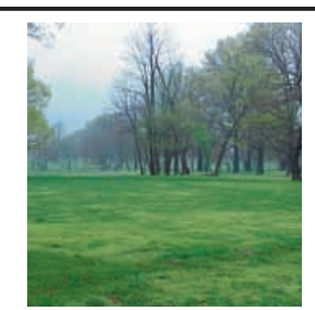

Study Area Time Line:

1951

- Watterson Expressway/ Shelbyville Road interchange
- St. Margaret Mary built (1951)
- Bellemeade recorded (1954 – 1955)
- Blue Ridge Manor recorded (Section 1 1956) (Section 2 1962)
- Wildwood Subdivision recorded (1955)

1963

- U. of L. Shelby Campus built (1961)
- Hurstbourne/I-64 interchange built
- I-64 constructed
- Blue Ridge Manor recorded (Section 1 1956) (Section 2 1962)
- Hurstbourne (1965 – 1978) (17 phases recorded)

1975

- Oxmoor Mall built (1971)
- Plainview Subdivision (1972-1984)
- Plainview Center (1972 -1977)
- Plainview Swim and Tennis Center
- “Flash Cube” Building constructed (1972)
- Forum office development
- Oxmoor Toyota initial construction
  (Partially rezoned in 1976; 9-6-76)

1985

- City of Hurstbourne incorporated (August 1982)
- Construction of Oxmoor Woods (1982 – 1986)
- Bunsen Parkway
- Swope Auto Center (rezoned 1985, June 1988- groundbreaking; Nov 88- opening day)
- May 1989 Phase 1 complete
- Hurstbourne Towne Center (Rezoned 1985; 9-67-85)
- Forum retail
- Hurstbourne extension from Forum north
- Whittington Parkway

1995

- Oxmoor Mall expansion (February 1998- started construction) (November 1999- Finished)
- Bullitt Farm Rezoning (2002; 9-15-02)

2005

- Hurstbourne Area Transportation Study and Small Area Plan Initiated

Land Use

Introduction
Understanding how land is utilized, currently and in the future, is one of the central components to a community planning process. Developing guidelines for land use that consider their interrelationships, how they impact other systems, and the pattern and form they create is a fundamental step toward reaching a community's vision.

The land use component of a small area plan offers the opportunity to evaluate existing land use and its relation to the vision established for the community. The plan then becomes a tool for developers and community leaders, guiding future development and redevelopment in a manner more consistent with that vision.

North Hurstbourne Parkway

The Hurstbourne study area consists of a mix of land uses that make the area unique in character. A vast majority of the study area has already been developed. The two largest undeveloped tracts of land, Oxmoor Farm and Shelby Campus, have development proposals in place or in progress. As a result, much of the area's future development will either be redevelopment of existing parcels or small infill development projects. As such, a land use plan for the Hurstbourne area should focus on two goals—setting a course for effecting land use change over time and ensuring appropriate transitions between land uses to protect the existing character of the area.

Form Districts
Form Districts were adopted as part of Louisville Metro's Comprehensive Plan to recognize the varied and unique development patterns or "forms" that exist throughout Jefferson County. Form Districts have distinct boundaries through which unique regulations governing new or infill development are applied to deal with compatibility issues. Form District regulations include Community Design Standards and Site Design Standards. Community Design Standards consider proposed development and its relationship to the form and pattern of existing development in a broad community context. Site Design Standards pertain to a proposed development's site and building design within the context of existing nearby development.

The pattern and form of the Hurstbourne study area evolved over time in response to rapid growth that followed the area's expanded roadway system. This rapid growth produced a wide variety of land uses to serve both the immediate area as well as a wider, regional community. This growth took place during a period of evolving land use regulations and predicated much of the more comprehensive planning for the area including the Hurstbourne Parkway Corridor Study in 1992 and the adoption of Cornerstone 2020 in 2000. The rate of development and the diversity of land use patterns created from it are reflected in the variety of Form Districts that were ultimately established for this area. Today there are six Form Districts found within the boundaries of the study area –Neighborhood, Campus, Suburban Marketplace Corridor, Town Center, Regional Marketplace Center, and Suburban Workplace.

City of Hurstbourne

The Hurstbourne Study Area represents an area of 3, 267 acres. The Neighborhood Form District (NFD) is the most prevalent form, representing 48% of the study area. The NFD supports the redevelopment, enhancement and preservation of existing neighborhoods and villages to provide safe and healthy places to live where residents share a sense of place. 32% of the study area is designated as Campus Form District (NFD). The Campus Form District, which includes most of the Oxmoor Farm and all of the Shelby Campus, is characterized as a self-contained pattern of development that serves the daily needs of workers, students and residents.

U of L Shelby Campus

The Suburban Marketplace Corridor Form District (SMCFD) represents a relative small percentage of the study area (11%), but includes much of the Hurstbourne and Shelbyville Road corridors, greatly influencing the character of the area. The SMCFD is intended to create a vibrant marketplace which contains a mixture of uses and has a strong sense of identity. The southwest quadrant of the Hurstbourne Parkway/Shelbyville Road intersection has been designated as a Town Center Form District (TCFD) and makes up only 3% of the study area.

Hurstbourne Lane

The TCFD encourages community-serving retail and employment centers that contain a balanced mix of places to live, work and shop. The area including and immediately surrounding the Oxmoor Mall has been designated a Regional Marketplace Center (RMC) and represents only a small percentage (3%) the study area. RMC Form Districts allow regional-serving marketplace centers that contain a wide variety of high intensity land uses within a focused area.

Oxmoor Mall

Suburban Workplace (SW) represents the smallest percentage (0.02%) of any Form District in the study area. The SW is designated to reserve land for large-scale industrial and employment uses in suburban locations.

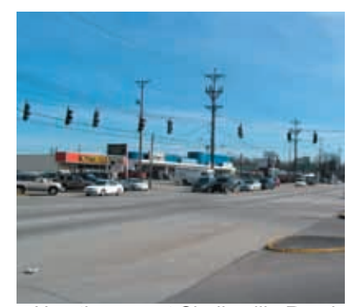
Hurstbourne at Shelbyville Road

While some Form District designations reflect a forward thinking approach toward land use patterns in the area, most are merely responding to existing patterns of development that were in place at the time Form Districts were established. Based on an analysis of existing land use patterns and a better understanding of the Form Districts and their intent, certain Form District designation changes and boundary line adjustments have been recommended.

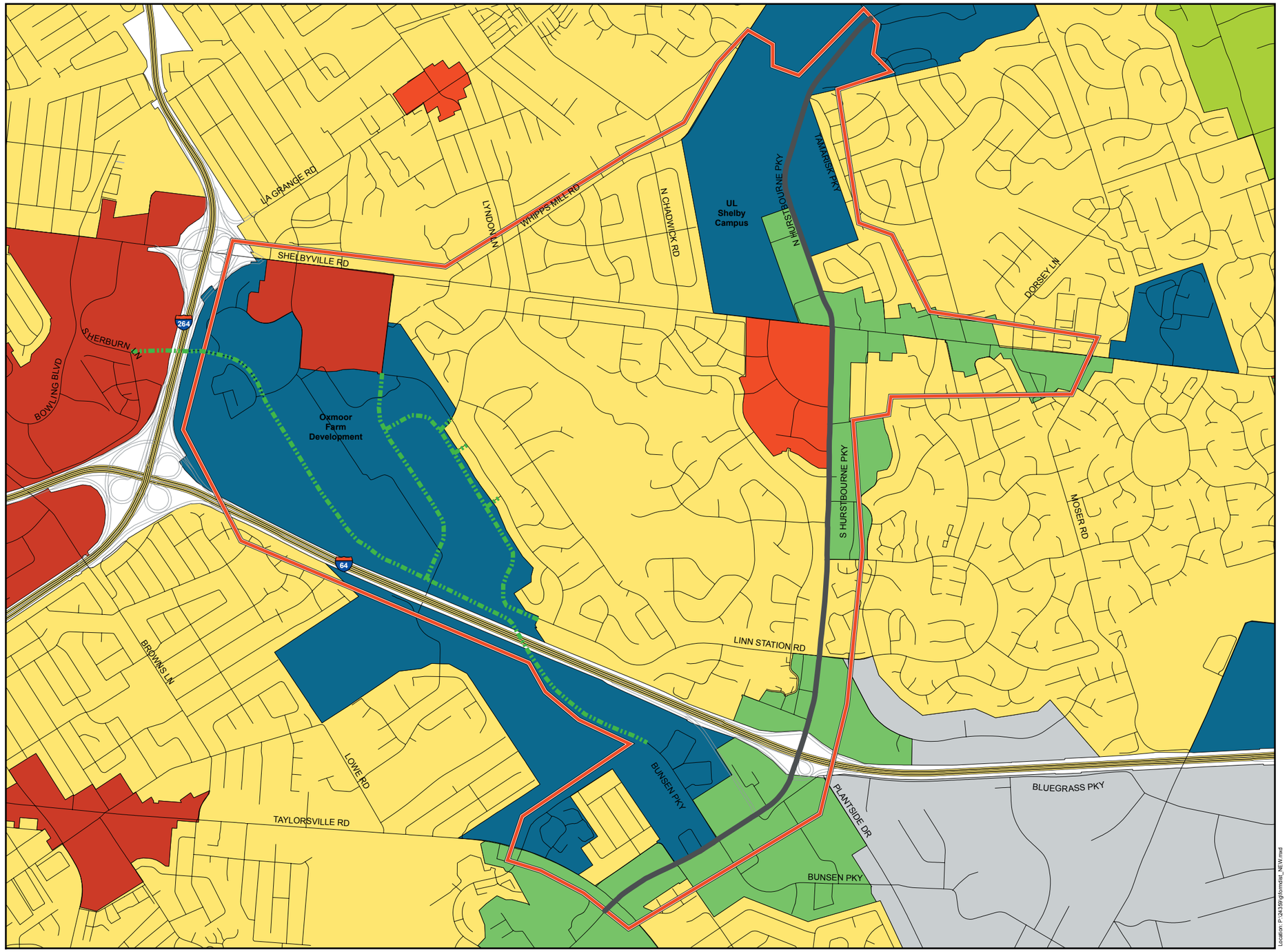

Copyright (c) 2005, LOUISVILLE AND JEFFERSON COUNTY INFORMATION CONSORTIUM (LOJIC), SOUTHERN INDIANA GIS (SIGIS), LOUISVILLE WATER COMPANY (LWC), and LOUISVILLE METRO GOVERNMENT
Louisville Water Company
Louisville/Jefferson County Information Consortium (LOJIC), a Jefferson County, Louisville Water Company, and Louisville/Jefferson Metro Government
Louisville Water Company
Louisville Metro Government
Property Valuation Administrator
No part of this map may be reproduced or transmitted in any form or by any means, electronic or mechanical, including photocopying and recording, or by any information storage or retrieval system, except as expressly permitted in writing by SIGIS.

NORTH

0 700 1,400 2,800 Feet

Hurstbourne / Shelbyville Roads Form Districts

Legend
- Hurstbourne Study Area
- Hurstbourne Lane
- Oxmoor Farm Roads (Proposed)
- Buildings

Streets
- Expressway
- Expressway Ramp
- Major Arterial
- Minor Arterial
- Primary Collector
- Secondary Collector
- Local

Form Districts
- CAMPUS
- NEIGHBORHOOD
- REGIONAL CENTER
- ROW
- SUBURBAN MARKETPLACE CORRIDOR
- SUBURBAN WORKPLACE
- TOWN CENTER

Location: P:\24.359\gis\model_NEW.mxd

Density and Zoning
Density is the relationship between the use and land area, which drives a number of design elements including building height and separation as well as available open space. The allowable density for any given site is established within each zoning district.

The current zoning classifications found within the study area include Residential (R-1, R-3, R-4, R-5, R-5A, R-6, R-7), Office/Residential (OR-1 and OR-3), Commercial (CN, C-1 and C-2) and Planned Researched/Office District (PRO). The existing zones and the percentage of area of each zone within the study area are listed in the following table:

ZONE	Percentage of Study Area
R-1	.25
R-3	.5
R-4	54.8
R-5	1.5
R-5A	.8
R-6	8.2
R-7	2.4
OR-1	.2
OR-3	9.5
CN	.2
C-1	1.85
C-2	10.8
PRO	.1

City of Hurstbourne

City of Hurstbourne Town Center

Residential
Maintaining and enhancing the character of residential development is viewed as an important element to protect area resident's quality of life and help ensure a vibrant, mixed use community. 68.5% of the property within the study area is zoned residential, with the majority being single-family residential. 55% of the parcels in the study area are zoned R-4 single family residential. This zoning district permits a density up to 4.84 dwellings per acre and a Floor Area Ratio (FAR) of 0.5. (i.e., a 5,000 square foot structure could be built on a space 10,000 square feet in area.) 11% is zoned multi-family residential ranging from R-5A to R7, with a density ranging from 12.01 dwellings per acre to 34.8 dwellings per acre.

Residential neighborhoods in the study area include the City of Hurstbourne, Bellemeade, Blue Ridge, Hurstbourne Acres, Wildwood and Moorgate. While new development and redevelopment is welcomed in the area a strong sense of community needs to be maintained. New developments need to be compatible with the surrounding uses. Creating well thought out transitions and buffers between existing residential uses and new development will help to maintain the character of the Hurstbourne area neighborhoods.

Office
Office/Residential zoning represents almost 10% of the study area. The majority of the developed office/residential is currently inside the Town Center Form District. The Oxmoor Farm Master Plan however, designates approximately 150 acres to OR-3 zoning district, which will bring more employment opportunities to the area. Additionally, the master plan for University of Louisville's Shelby Campus proposes almost exclusively new office uses. The plan currently includes approximately 4.1 acres for residential use with the remaining approximately 260 acres proposed for a business and technology park. Office uses provide employment opportunities for the immediate area but also draw from the region creating employment for the community.

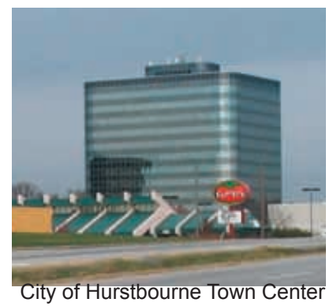
City of Hurstbourne Town Center

Encouraging a mix of uses on these larger development sites offers several advantages to single-use developments. The combined uses provide an opportunity for residents to live in a close proximity to work. Mixed use developments also help to mitigate traffic impacts by balancing peak hour trips, increasing opportunities for internal capture (keeping more trips within the development) and encouraging alternative transportation modes.

Commercial
Commercial land uses make up 19% of the study area and are generally found along the Hurstbourne Parkway and Shelbyville Road corridors. Some of these commercial uses include Oxmoor Mall, Sam Swope Auto Center, Oxmoor Toyota and numerous strip centers. Commercial uses provide valuable services to residents of the neighborhood but also serve a much larger market area. The southwest quadrant of the Hurstbourne/Shelbyville intersection, for example, as a Town Center Form District, is intended as the local community's center for retail and employment activities. Oxmoor Mall, on the other hand, is a Regional Marketplace Center Form District, serving a much larger geographic region. Any future commercial development and redevelopment in the study area should be located to reinforce and strengthen the roles of these designated activity centers.

Swope Autocenter

Institutional
Institutional, public and semi public uses are found throughout the study area. These uses include several places of worship, colleges, elementary school and a fire department. Institutional uses play an important role providing many of the services seen as adding to quality of life for area residents. Many institutional uses however, serve a larger geographic region and provisions should be made to ensure that institutional uses remain compatible to the existing patterns and forms that they coexist with.

Hurstbourne Baptist Church

Chapter 5: Mobility

Mobility

Introduction
Mobility is clearly the greatest challenge for residents, workers, and visitors to the Hurstbourne area. Ever increasing volumes on the arterial and collector roadways have led to traffic flow and air quality issues. This in turn has placed added pressure on the area's local roadways, affecting quality of life for residents. Broadly speaking, there are two approaches for improving mobility in this area — reducing vehicular trips and improving the existing transportation infrastructure.

Any meaningful reduction in the number of vehicular trips being generated in this area, either as origin, destination, or pass through, will require a comprehensive solution that will involve changes at a variety of levels. Trips begin with land use, suggesting that future development decisions within the region consider trip generation and distribution as a top priority. However, since the majority of the study area has already been developed, part of the short term solution is to focus on the redistribution of existing trips to help reduce the volume of trips moving through the Hurstbourne area.

Improving the existing transportation infrastructure will not reduce trips, but will increase efficiency, either by improving vehicular trip movement or by allowing for increasing use of alternative transportation modes. This study will consider major roadway improvements, spot roadway and intersection improvements, neighborhood improvements, access management, and multi-modal possibilities. Inadequate area facilities for alternative transportation modes limit mobile choice, which only adds to the volume of trips on the roadway system.

Every form of transportation, whether it is pedestrians, bicyclists, transit, or motorists, has different infrastructure or facility needs. Understanding these needs along with current and future transportation demands will help guide what improvements are required to meet the transportation needs of the Hurstbourne area. These needs relate to the increase in the traffic on the arterial roads, Shelbyville Road and Hurstbourne Parkway, and the high traffic generation of the regional land uses, such as Oxmoor Mall. Additionally, limited travel routes lead to a traffic increase on some of the smaller, local roads.
The increase in traffic on the arterials and collector level roads has even affected the properties along the corridor. Some commercial property issues are multiple entrances, an inability to leave or merge into traffic, and the large traffic volume that hampers access to the businesses. Much of the access management principles are based on resolving conflicts in favor of safety and traffic flow. This may mean creating a new balance between access to the properties along the roadway and the safety of all.

Census statistics from the year 2000 show that most people are choosing cars over riding the bus, biking and walking. According to the 2006 Census data, Roughly 85% of the commuters drive alone while 5% carpool and 6% work from home. Less than 2% used public transportation, walked or bicycled to work. Buses, bikes and walking are alternatives to driving which can, in part, alleviate traffic congestion. Unfortunately, much of the infrastructure along the roadways is inconsistent and incomplete for these other forms of transportation. Therefore improvements of various kinds will be needed in order for these alternatives to have greater use.

The transportation recommendations represent the culmination of extensive data collection, analysis and review by the transportation and planning consultant, project staff, and the Study Advisory Team. Recommendations for mobility improvements vary from the large to small scale and from short to long term projects. The recommendations aim to address traffic congestion delay, safety, and quality of life. The recommendations are divided into the three general categories - reducing vehicular trips, traffic management, and increasing capacity. Some of the recommendations are broad-based and conceptual, identifying a direction for more detailed study and analysis. Some of the recommended improvements are currently proposed and in the planning phases, others are being presented in this document for the first time. All of the recommendations, particularly those affecting future infrastructure improvements, should include a comprehensive public involvement component as part of the process. These recommendations are also listed in the plan implementation section. They are listed along with the implementing agency and a proposed timeframe. Successful road improvements should be timed and orchestrated to meet current traffic needs and future development. Further study, research and information on mobility can be found in the Transportation Study Appendix.

Reducing Vehicular Trips
These recommendations are mostly planning policy and program based, centered on reducing automobile travel demands. These recommendations begin with the development of a Transportation Demand Management Program (TDM). A TDM program is a cooperative effort between public agencies and private employers which should include Louisville Jefferson County Metro, KIPDA, Greater Louisville Inc., Jeffersontown Chamber of Commerce and businesses in the Jeffersontown Industrial Park, Oxmoor Farm Trustees and future development on the Oxmoor Farm site, University of Louisville and future businesses in the Shelby Campus Development. A TDM program involves encouraging alternative work arrangements and alternatives to single-occupant vehicles through incentives and disincentives. There are endless possibilities in a TDM program.

Planning and designing new roadways or roadway improvements as "Complete Streets" is recommended. Complete streets include provisions for bicycles (bike lanes), pedestrian (sidewalks) and transit facilities. These bike lanes and sidewalks are essential to developing a network of bicycle and pedestrian facilities throughout the study area. In addition to making these provisions with roadway improvement projects, sidewalk and bike lane projects are recommended on the local neighborhood streets to complete the network to connect the residential areas to the arterials and to regional and local destinations. Portions of these networks may already exist but need ADA accessible ramps which could be improved with tactile (textured pavement) warnings as specified in MUTCD, AASHTO, 28 C.F.R. 35, and ADA Accessibility Guidelines.

Network of Bicycle and Pedestrian

Improvements to transit services in the area are also recommended. These improvements include benches and shelters at existing stops, additional park and ride lots, and connecting sidewalks. Pull off lanes at heavily used stops on busy roadways are also recommended. Transit centers that connect multiple modes of transportation, while providing services such as news stands, are recommended at major pedestrian trip generation locations along Hurstbourne Parkway

and Shelbyville Road. A circulator route serving the commercial areas along Hurstbourne Parkway and Shelbyville Road is also recommended. This circulator route could be implemented as a pilot project during the holiday shopping season, evaluating routes, stops and frequency.

Improvements to transit service should also include consideration of bus rapid transit (BRT) programs and technology. BRT is a mass transit alternative that includes the travel quality of rail transit with the route flexibility of buses. BRT uses intelligent transportation system technology combined with passenger amenities to shorten travel times and improve convenience. It is recommended that consideration be given to opportunities to phase BRT programs in over time and to implement pilot projects quickly using existing road infrastructure.

Traffic Management

The traffic management recommendations are also planning policy and program based, but they are centered on controlling traffic patterns and maintaining traffic flow. These recommendations begin with the development of a Transportation Systems Management Program (TSM) to improve traffic flow. Recommended improvements that should be considered as a part of this TSM include signal coordination, access management and intelligent transportation system technology. Expansion of the TRIMARC monitoring and freeway management program to include the corridors of Shelbyville Road and Hurstbourne Parkway is recommended.

The following signal coordination is recommended for consideration by the KYTC:

1. Coordination of the existing signals on Shelbyville Road at Whittington Parkway and Wildwood Lane with the Hurstbourne Parkway system
2. Coordination of the existing signals on Shelbyville Road west of and including Lyndon Lane
3. Coordination of Stony Brook Road at Taylorsville Road with Hurstbourne Parkway

Coordination of these signals should be requested for evaluation by KYTC central office. This request can be made through the KYTC District 5.

Diagrammatic signs are recommended for consideration westbound on Shelbyville Road and northbound on Oxmoor Lane to aid motorists in lane choice approaching the I-264 on ramp.
The access management recommendations, which consist of frontage roads, consolidating access points, raised medians and right-in/right-out access points, are shown on the Recommendation maps in Chapter 7. Currently, the major arterials of Shelbyville Road and Hurstbourne Parkway are troubled with many entrances to the adjoining properties. These can slow traffic down and create awkward traffic movements in and out of the properties, adding to congestion and safety concerns on the arterial roadways. These recommendations are intended to improve safety and traffic flow along the roadway by controlling access point design and location.

Improved entrances, with better geometric design and located in safer places, can give drivers better cues for where to turn. Frontage roads gather the traffic from individual properties but direct traffic onto the major roads at a safe, single entrance. This idea could be used for many of the residential properties along the corridors or those businesses located in neighborhood form districts. Consolidating multiple access points and creating shared entrances with access easements and/or cross-over agreements. Right-in/right-out access points eliminate the left turn conflicts. Raised medians, which can be landscaped to enhance the beauty and character of an area, are the most effective way to create right-in/right-out access points.

Development of Traffic Calming Plans

As mentioned, traffic management not only involves maintaining traffic flow on the arterials but also controlling traffic on the local streets. Connectivity between land uses is necessary to provide alternative routes and avoid unnecessary traffic on the arterials. With connectivity, may be the need for traffic calming to control the traffic to appropriate volume and speed. The study identified several local streets for consideration of traffic calming measures. These streets include Lyndon Lane, Nottingham Parkway, Leesgate Lane, Linn Station Road, Colonel Anderson Parkway, Oxmoor Woods Parkway, Chadwick Road and Bellemeade Road. It is recommended that traffic calming plans be developed with extensive public involvement and agreement from residents, neighborhood associations and public officials. It should be noted that this study is not recommending any closures or any other specific traffic calming techniques or locations. The traffic calming techniques and locations presented are conceptual and are suggested only for consideration based on comments received from the public and members of the SAT. Techniques are presented that address traffic volume and traffic speed while considering the visual quality of the roadway and existing roadside character.

The first decision of a traffic calming plan should be to determine the goal to be achieved. Part of this decision should be the collection of data through monitoring and enforcement and the analysis of that data. After the goal is identified, suitable techniques are chosen to meet that goal. Some techniques are used to control the speed of traffic while others are used to control the volume of traffic and some may do both. A good traffic calming plan should use multiple techniques for diversification, but should be carefully planned to avoid arbitrary randomness. Traffic calming measures should be installed on an area-wide basis simultaneously to avoid transferring the problem from one local street to another. If the problem is found to be seasonal or during peak hours, consideration should be given to techniques which can be implemented on a seasonal or hourly basis to minimize impact to the residents. Ultimately, the techniques used and the location of them should be agreed to by 75-80% of the affected property owners. The affected property owners include any residents that must regularly use the road as well as the residents along the road.

Volume Control Techniques Recommended for Consideration

1. Gateway treatments with plantings, narrower entrances and traffic circles
2. A program of random roadblocks
3. Strategically placed full and partial street diverters that increase the travel length and time through an area without preventing it completely. Automatic gates should be considered if budgets permit.

Speed Control Techniques Recommended for Consideration

1. Revised or reinforced signing (i.e. changeable message signs displaying "YOUR SPEED")(higher fines and photo enforcement would require legislation)
2. Raised cross walk on Nottingham at Oxfordshire Lane
3. Narrowing with shared lanes (bike, pedestrian, parking)
4. Lateral shifts or curves (chicanes) in the roadway with modification of existing medians
5. Narrowing at stop controlled intersections with wide lanes
6. Traffic circles in place of fully and partially stop-controlled intersections

Connectivity Between the City of Hurstbourne and the Oxmoor Farm Development
As previously stated, connectivity between land uses is necessary to provide alternative routes and avoid unnecessary traffic on the arterials. Therefore, elimination of the proposed connections between the City of Hurstbourne and the Oxmoor Farm Development is not recommended. The connectivity and direct access to the commercial uses in the proposed Oxmoor Farm development, Bunsen Parkway and potential connections with I-64 will improve traffic flow in and around the area by providing alternate routes. This is especially true for the residents in the City of Hurstbourne. In addition, eliminating these connections will not address the existing cut-through traffic concern. With that being said, all streets in the City of Hurstbourne are owned and maintained by the City of Hurstbourne; therefore, any traffic calming on those streets is ultimately a city decision involving legal matters. If any of these connections are eliminated, it is recommended that pedestrian and bicycle access still be allowed. If Stamford Drive is not connected with the proposed development, the existing three way stop at Oxmoor Woods Parkway should be made a one way stop.

Saint Margaret Mary School
It is recommended that St. Margaret Mary implement a student drop-off plan that strongly encourages increased use of drop-off locations at the rear of the school to avoid stacking onto Shelbyville Road. This could be as simple as adding personnel to the current plan that directs drivers to the rear when the front drop-off location is full. If this change is not effective, redirecting the traffic around the school in a clockwise direction should be considered.

Increasing Capacity
Most of the recommendations to increase capacity require infrastructure improvements which are mostly conceptual and will require a comprehensive public involvement process before implementation. Many of these recommendations are complex and dependent upon one another. The first recommendation is the development of alternative east-west and north-south routes that will increase capacity in the area while drawing traffic away from Shelbyville Road and Hurstbourne Parkway. The planned Westport Road improvements including the interchange at I-264 and the Bunsen Parkway extension will be alternative east-west routes. Alternative north-south routes could include widening or improving Moser Road and extending Christian Way north of Shelbyville Road and south of I-64. For convenience and ease of reference, the rest of the recommendations are grouped geographically.

Bunsen Parkway Extension
Due to the value of the Bunsen Parkway extension, it is recommended that it be constructed in one phase, if financially feasible.

Construction of a new connection between Bunsen Parkway and Taylorsville Road along Blowing Tree Road is also recommended to improve north/south access. Design Blowing Tree Road as a frontage road rather than the primary route to protect existing residences and minimize access points.

University of Louisville Shelby Campus Roadway
The Kentucky Transportation Cabinet's Six Year Plan includes construction of roadways through the University of Louisville Shelby Campus connecting Whipps Mill Road, Hurstbourne Parkway, and Shelbyville Road in 2008. These connections are also included in the Shelby Campus Master Plan First Phase. These connections are recommended. Capacity improvements and traffic calming may be needed along Whipps Mill to accommodate the additional traffic and control the speed. Traffic calming along Whipps Mill should include the addition of bike lanes. Roundabouts may be appropriate and should be considered on Whipps Mill at Lyndon Lane and at the new road.

It is recommended that the Shelby Campus entrance on Shelbyville Road be realigned opposite Whittington Parkway as proposed by the Shelby Campus master plan to facilitate better traffic flow. It is recommended that the signal spacing along Hurstbourne Parkway be studied with a simulation model to determine the impact of and best location for additional signal(s) between Hurstbourne Trace and Ormsby Station. It is typically ideal to limit the number of signals along an arterial and provide connectivity to access those signals from nearby properties. However, the cost and feasibility of those connections can prevent this ideal scenario.

An update to the traffic impact study prepared by JWA/HMB dated November 1, 2004 is recommended to reflect the current development plans. This traffic study should be performed in accordance with Louisville Metro Planning and Design standards and with the input of Louisville Metro Planning and Design staff.

Hurstbourne Parkway / Tamarisk Parkway
A full signal warrant analysis and delay study by the Kentucky Transportation Cabinet is recommended at this location to determine if signal warrants other than the peak hour warrant (3) are met. Connections to Hurstbourne Parkway from Medina Way and Dorsey Way, which lead to signalized intersections, are recommended as alternatives to signalization of Tamarisk Parkway and Hurstbourne Parkway. Other connections from Tamarisk Parkway would require the acquisition of one or two residence. For connectivity and alternative route availability, two-way connections are recommended at as many locations as possible. These connections should only be made if a more detailed engineering study with public involvement determines that the existing infrastructure is or can be improved to be adequate.

Shelbyville Road – Christian Way to Whipps Mill
If the area along the north side of Shelbyville Road from Christian Way to Whipps Mill is redeveloped, it is recommended that the primary access be through the Christian Way intersection. It is further recommended that the re-development provide the opportunity for future connectivity to North Whipps Mill, New LaGrange Road and Lyndon Lane for the possibility of eliminating the need for the existing intersection of Whipps Mill and Shelbyville Road. With the recommended access management, it is also recommended that the KYTC remove the existing signal at 8-Mile Center. Until such time that the need for the existing intersection of Whipps Mill and Shelbyville Road can be eliminated, it is recommended that it be evaluated and considered for signalization by the Kentucky Transportation Cabinet. The existing signal at 8-Mile Center could be relocated to Whipps Mill.

Widening Shelbyville Road to three through lanes in each direction west of Whipps Mill is recommended to accommodate the traffic demand to/from Whipps Mill. While the widening of Shelbyville Road west of Whipps Mill will increase capacity, the levels of service will remain similar due to the increased traffic demand. For the preservation of community character, further widening of Shelbyville Road east of Whipps Mill is not preferred by the SAT and is not recommended. For the good of the entire area, multi-modal options such as bus rapid transit should be considered for the Shelbyville Road corridor.

If all of the aforementioned access management recommendations are not feasible within a reasonable time frame, a phased approach is recommended. A continuous barrier median from Christian Way to Whipps Mill with the removal of the 8-Mile Center signal and as much of the recommended access management as possible is recommended as part of this phased approach. The signalization of Whipps Mill and Shelbyville Road would still be recommended for evaluation with consideration given to the conflict between the U-turns and southbound right turn overlap at Whipps Mill.

Shelbyville Road / Hurstbourne Parkway
The widening of southbound Hurstbourne Parkway and the improvements planned at the intersection of Shelbyville Road and Hurstbourne Parkway are recommended as planned. However, future improvements are needed to accommodate the projected traffic demand. If increased capacity is desired at this intersection, a Continuous Flow Intersection is recommended for further evaluation to increase capacity and provide safe pedestrian accessibility with large landscaped refuge islands. A VISSIM simulation model is required for analysis of this type of intersection. A cost/benefit analysis should also be included in this evaluation.

Continuous Flow Intersection at Shelbyville Road and Hurstbourne

Shelbyville Road / Blue Ridge Road
Two alternatives are recommended for consideration at this location depending on cost and public opinion. The first alternative recommended for consideration is the restriction of westbound left turns to Blue Ridge Road with a barrier island between the through lanes and the eastbound right turn bay. This is the least expensive alternative but has the greatest impact on the public.

The second alternative recommended for consideration is the relocation of the Blue Ridge Manor subdivision entrance, which is also used by the Trinity Presbyterian Church, approximately 225' west. This alternative requires extension of the existing eastbound right turn lane on Shelbyville Road, closure of the church's rear access on Blue Ridge Road and utilization of the existing frontage to access Blue Ridge Road. This alternative is more costly but it provides the most accessibility.

Hurstbourne Parkway / Taylorsville Road
It is recommended that Hurstbourne Parkway be widened to include three through lanes in each direction from Taylorsville Road to Stony Brook Drive. This widening should be considered with the possible widening of Taylorsville Road in 2016 as recommended in KIPDA's 2030 Horizon Plan.

Blue Ridge Manor

I-64 / Bunsen Parkway
The potential benefits of an interchange on I-64 between I-264 and Hursbourne Parkway warrant a more extensive scoping study to more accurately determine the traffic impacts, geometrics and functionality of an interchange in this area. A full interchange will likely require collector distributor roads through the interchanges of I-264 and Hurstbourne Parkway. If a full interchange at this location is not feasible, a partial interchange with an eastbound off ramp to and a westbound on ramp from the proposed Bunsen Parkway extension should be considered. Partial interchanges are not favored by the Federal Highway Administration; however, the possibility that these ramps may be feasible without the need for a collector distributor road warrants consideration. At this time, the recommendation for this alternative is a more extensive scoping and interchange justification study.

Community Character

Introduction

Community character can be defined by the elements that make an area unique. There are many factors that can set one area apart from another. Architectural style, common building setbacks, street furnishings and landscaping are just a few of the visual cues that distinguish one place from another. A Small Area Plan helps determine what the unique characteristics of an area are and how to preserve and strengthen the positive characteristics by guiding future changes.

The Hurstbourne Area study encompasses different communities each with their own character traits. Even the corridors of Hurstbourne Parkway and Shelbyville Road display different characteristics as you travel along them. The recommendations of this study strive to maintain and strengthen each of these unique character districts while incorporating common elements to transition between the neighborhoods.

Hurstbourne Parkway Corridor

Hurstbourne Parkway has been designated as a parkway corridor by the Comprehensive Plan. Parkways are characterized by larger building setbacks, additional landscape requirements and buffering. The intent of a parkway is to protect existing scenic and aesthetic qualities to ensure a quality visual experience on these corridors. Portions of Hurstbourne Parkway exhibit the characteristics of a parkway with berms, landscaping and larger setbacks. However, other portions of Hurstbourne are typical of suburban commercial corridors characterized by strip center development, parking adjacent to the roadway with minimal screening or buffering and multiple signs cluttering the roadside.

Hurstbourne Parkway near I-64

North Hurstbourne Parkway

City of Hurstbourne

North Hurstbourne Parkway has the opportunity to maintain the existing parkway character. Berms and landscaping should be designed to be compatible with existing buffers along Hurstbourne as new development occurs. Office, residential and commercial developments should be identified with entrances designed at a scale and character appropriate to each. Existing landscaping should be maintained and protected to strengthen the parkway character of the roadway. Future parking areas should be screened from the roadway with berms and landscaping.

South Hurstbourne Parkway is a mixture of character districts as seen on the following corridor maps. Each character district will need a different approach to maintain the appropriate character and to correct inappropriate character treatments where necessary. While the focus is more heavily commercial along this portion of roadway, it is still a parkway. Landscaping and berms need to be incorporated as part of any new development or redevelopment to extend the parkway feel from the north portion of Hurstbourne south.

Pedestrian and bike facilities are an important part of the character of a place. The lack of pedestrian connections can be clearly seen along the south section of roadway by paths that have been worn by people navigating between uses. Pedestrian connections should be strengthened between the residential sections of Hurstbourne and it's designated Town Center. While there is a need for pedestrian and bike facilities in many areas of this corridor, these facilities need to be cognizant of their surroundings. Facilities on North Hurstbourne Parkway will need to be incorporated in a way that is compatible with the more natural surroundings and larger setbacks. Pedestrian facilities provided along South Hurstbourne Parkway will need buffers between the busy roadway and the pedestrian. These facilities and associated streetscape elements will also need to reflect the identity of the area.

Signage along North Hurstbourne Parkway has been dictated by parkway standards which limit the size and number of signs along the roadway. The conglomerate of signs along South Hurstbourne Parkway detracts from the visual character of this area. New and existing businesses should be encouraged to bring existing signage into compliance with parkway standards to greatly improve the visual quality of the roadway.

Hurstbourne Parkway

Shelbyville Road Corridor

Shelbyville Road, within the study area boundary, continues to have a strong neighborhood feel, despite the roadways function as a major arterial. There is a clear change of character that occurs between the commercial nodes at the major intersections on each end of the study and the residential lots between them. The residential areas provide a very different feel to the motorist traveling along Shelbyville Road.

Shelbyville Road

The existing stand of mature maple and oak trees along Shelbyville Road create a distinctive character for this portion of roadway. The canopy of the trees over the edge of the roadway and the screening provided by the mass of vegetation create a shaded boulevard environment. Preserving and enhancing the mature vegetation is a very important component to maintaining the residential identity of the area.

In contrast, the commercial nodes at the intersection of the Watterson Expressway and Hurstbourne Parkway have a considerably less landscaping and buffering between the roadway and expansive parking lots. Connections to the adjacent residential areas are minimal and consist of vehicular connections at their best. These commercial areas lack the character of the surrounding area and have few features that indicate a sense of place. Additional trees and berming should be added in the commercial areas to connect them visually with the surrounding neighborhoods. Pedestrian connections should be provided where absent to allow residential neighborhoods more convenient access.

Neighborhoods

City of Hurstbourne

The City of Hurstbourne was primarily developed in the 1970's after completion of I-64. This master planned community was designed around the historic farm. The golf course was oriented around the historic house utilizing the structure as a clubhouse. Wide, curvilinear streets with landscaped medians are a dominant design feature throughout the city. The area at the intersection of Hurstbourne Parkway and Shelbyville Road is designated as a Town Center Form District, serving an important function to the community. However, it's current use and layout is disjointed from the rest of the community. Pedestrian connections should be strengthened. Streetscape elements should be incorporated along sidewalks to visually connect the town center with the rest of Hurstbourne. The implementation of pedestrian friendly designs with sidewalk cafes, parks, plazas and neighborhood oriented shops should be used to strengthen this area as a part of the City of Hurstbourne. The current auto-oriented focus of the town center makes it feel as if it is more a reaction to the intersecting major roadways and less a part of Hurstbourne and its residents.

Wildwood, Bellemeade, Hurstbourne Acres

Although smaller in area than the City of Hurstbourne, the neighborhoods of Bellemeade, Hurstbourne Acres and Wildwood share many of its character traits. These neighborhoods were developed as single family subdivisions during the 50's, 60's and 70's. Mature trees line the roadways and shade front yards. Roadside drainage is handled through swales versus a curb and gutter system, giving these communities a more residential feel. The roadways in these neighborhoods have narrow lanes with slower speeds. With sidewalks lacking on many streets, local residents often walk on the roadways. As traffic volumes have increased along the major arterial roads adjoining these neighborhoods, the opportunity for cut-through traffic on local roadways has increased creating conflicts.

The mature vegetation throughout these neighborhoods is one of the most important elements to preserving the identity of the area. The overall plan for maintaining, preserving and replacing existing trees should address these neighborhoods in particular. Maintaining the existing trees enhances the community atmosphere and creates quiet residential streets.

Gateways

Each of the neighborhoods in the study area has a gateway or signature entrance at the main entrances to the neighborhoods. The signature entrances vary in their specific physical makeup but all have a similar look. The scale of the signage, or walls, at each of the neighborhoods is compatible. The height and overall mass of each entryway are similar in nature. Additional gateway elements can be added to strengthen the character of the neighborhoods and their connection to each other. A change in pavement type at the entrances, architectural lighting or neighborhood banners could be added to the existing signage and landscaping to further signal that these are entryways to particular neighborhoods.

Gateways can also serve as transitions between adjoining areas of the study that differ in use and character. For example, well designed gateways can serve as visual queues signaling a transition from the more intensive Hurstbourne town center to the city's residential areas.

Oxmoor Farm

In 2002 a plan was approved for the future development of the remaining land of the Bullitt Farm. This plan incorporates residential uses, office uses and retail uses centered around a preservation easement. The preservation easement provides an expansive green space with pedestrian connections throughout the community. Office buildings border Interstate 64 with proposed and existing single family housing adjacent to each other to transition between future development and the City of Hurstbourne. The plan includes the addition of assisted living and retirement housing. A village center with retail uses has been proposed south of the existing Oxmoor Mall. The plan incorporates several uses to provide an opportunity for people to live, work and play in this community. Illustrations depict the anticipated character for the Oxmoor Farm community. Tree lined roadways and a greenway plan show the importance of open, green space throughout the neighborhood.

Oxmoor Farm

General design criteria were established as a part of the approved Oxmoor Farm Plan including a Streetscape Master Plan, Oxmoor Farm Design Guidelines, lighting standards and guidelines for signage. A maximum square footage of 100,000 square feet was set for any single commercial retailer. Construction of this development is tied to the construction of Bunsen Parkway.

University of Louisville Shelby Campus

The University of Louisville has plans to develop the Shelby Campus into a business and technology park. The plans call for creation of a park-like environment with recreation trails, parks and open space. Landscape buffers are proposed next to adjacent residential properties. Access through the new campus is provided along a landscaped boulevard. The plan was developed to be compatible with surrounding land uses and neighborhood character. A landscape master plan will need to be developed to ensure that the surrounding character is carried throughout the new development of the campus. Gateway entrances compatible with the other neighborhood entrances will need to be provided at the main entry points to the campus.

	Recommendation	Implementation Responsibility/Agency Involvement	Timeframe
	Cornerstone 2020/LDC		
LU-1	Revise Town Center Form District to include the multi-family to the south and northwest. Further expansion to include the remaining quadrants of the intersection should also be evaluated.	Louisville Metro Planning & Design Louisville Metro Council	Short
LU-2	Designate north side of Shelbyville Road, from 1-264 to St. Margret Mary as Suburban Marketplace Corridor Form District (SMCFD)	Louisville Metro Planning & Design Louisville Metro Council	Short
LU-3	Designate existing SMCFD (north of Shelbyville Road/west of Hurstbourne) as Campus Form District	Louisville Metro Planning & Design Louisville Metro Council	Short
LU-4	Designate existing SMCFD along Shelbyville road from Tamarisk Parkway east as Neighborhood Form District	Louisville Metro Planning & Design Louisville Metro Council	Short
LU-5	Designate SMCFD adjacent to Bunsen Parkway as Campus, Suburban Workplace, and Neighborhood Form Districts (see map).	Louisville Metro Planning & Design Louisville Metro Council	Short
LU-6	Encourage new development at Shelby Campus to include a mix of uses to promote more internal trip capture and balance peak hour trips	University of Louisville Louisville Metro Planning Commission	Medium
LU-7	As Oxmoor Farm develops, use single-family detached homes (parcel 9A) followed by a single row of attached homes (townhouses, condominiums or patio homes) facing and closest to Linn Station Road with higher density residential further west on parcels 7C and 9B, as a transition from the City of Hurstbourne to the higher density multi-family, retail, and office uses proposed	Bullitt Farm Trust Louisville Metro Planning Commission	Long
LU-8	Continue the Planning Commission policy recommendation drafted in 1986 establishing Whipps Mill Road as the eastern edge for linear retail development along Shelbyville Road; recognizing the triangular land area formed by Whipps Mill, Shelbyville Road and Lyndon Lane as appropriate for transitional land uses while maintaining residential character	Louisville Metro Planning & Design Louisville Metro Planning Commission	Short
LU-9	Require new or significantly expanded institutional uses to match residential forms (height, setbacks, and spacing) in any Neighborhood Form District	Louisville Metro Planning & Design Louisville Metro Planning Commission City of Hurstbourne	Short

Community Character Recommendations

Short: 0-2 years; Medium: 2-5 years; Long: >5 years

	Recommendation	Implementation Responsibility/Agency Involvement	Timeframe
	Cornerstone 2020/LDC		
CC-1	Develop streetscape schematic plan and construction plans detailing landscaping, buffering, setbacks, signage, and street furniture based on corridor specific recommendations for Hurstbourne Parkway and Shelbyville Road that strengthens the residential or mixed use character of each roadway segment	Louisville Metro Planning & Design Louisville Metro Council	Medium
CC-2	Apply the Oxmoor Farm Pattern Book requirements that address streetscape design for Bunsen Parkway to include the entire Bunsen Parkway corridor	Louisville Metro Planning & Design Louisville Metro Council	Short
CC-3	Develop a gateway and landscape master plan as part of the planned Shelby Campus improvements to help create a unique identity for the project while ensuring compatibility with its surroundings	University of Louisville Louisville Metro Planning & Design	Medium
CC-4	Develop a Greenway Master Plan to link the planned Oxmoor Farm and Shelby Campus planned open space networks with A.B. Sawyer Park, Forest Green greenway, and MSD's Whipps Mill basin	Louisville Metro Council	Long
	Policy-Programmatic		
CC-5	Develop a program to install street trees in existing verge areas along Shelbyville Road and Hurstbourne Parkway to help unify the character of each corridor and create a more inviting pedestrian environment	Bullitt Farm Trust Louisville Metro Planning & Design	Medium
CC-6	Prepare a maintenance and replacement plan for existing and new vegetation to preserve the tree-lined character of Shelbyville Road	Louisville Metro Planning & Design City of Hurstbourne	Short

	Recommendation	Implementation Responsibility/Agency Involvement	Timeframe
	Cornerstone 2020/LDC		
CC-7	Implement an education program (i.e., informational flyers) for the properties and businesses within the study area on maintenance and care of existing trees	Louisville Metro Planning & Design All area cities and neighborhoods	Short
CC-8	Develop a community-wide program to identify and educate the public on areas of historical, cultural, or environmental significance through unified design elements such as historic markers or informational plaques promoting their importance to the community. Use these interpretive elements to help visually and functionally link the complete transportation network (road corridors, walking paths/greenways, and bike lanes)	Louisville Metro Planning & Design City of Hurstbourne Bullitt Farm Trust University of Louisville	Long
	Infrastructure		
CC-9	Develop “Gateway” plans at Whittington and Shelbyville Road, Whittington and Hurstbourne Parkway, and Shelbyville Road and Hurstbourne Parkway to strengthen the Town Center identity	City of Hurstbourne	Medium
CC-10	Develop a phasing plan to implement landscape islands in center of Shelbyville Road where left turn movements are not needed (this recommendation may be modified to accommodate future Bus Rapid Transit-see Mobility recommendation M-12)	Louisville Planning & Design Kentucky Transportation Cabinet Louisville Metro Works Department	Long
CC-11	Develop “Gateway” plans where Linn Station, Leesgate, and Seaton Spring intersect with Nottingham Parkway to create a more visual transition between non-residential and residential areas of Hurstbourne	City of Hurstbourne	Medium

Mobility Recommendations

Short: 0-2 years; Medium: 2-5 years; Long: >5 years

	Recommendation	Implementation Responsibility/Agency Involvement	Timeframe
	Cornerstone 2020/LDC		
M-1	Plan new roadways as "Complete Streets" which include bicycle, pedestrian, and transit facilities to increase modal choice and reduce vehicular trips	KIPDA KYTC District #5 Louisville Metro Works Louisville Metro Planning & Design	Short
M-2	Develop additional North-South (i.e., Moser Road, Christian Way) and East-West (i.e., Westport Road, Bunsen Parkway) routes to reduce volumes on Hurstbourne Parkway and Shelbyville Road (see M-22, M-23, M-28)	KYTC District #5 Louisville Metro Works Louisville Metro Planning & Design	Long
M-3	Investigate Bus Rapid Transit for both the Shelbyville and Hurstbourne corridors, considering opportunities to phase BRT programs in over time to implement pilot projects quickly using existing road infrastructure	TARC KIPDA KYTC District #5 Louisville Metro Works Louisville Metro Planning & Design	Short
M-4	Create a network of bicycle and pedestrian facilities throughout study area along priority corridors (see map)	KYTC District #5 Louisville Metro Works Louisville Metro Planning & Design City of Hurstbourne	Short-Long
M-5	Improve TARC facilities along all routes throughout study area	TARC	Short-Long

	Policy-Programmatic		
M-6	Develop a Transportation System Management Program (TSM) including signal coordination, expansion of TRIMARC, and access management	Louisville Metro Planning & Design (Transportation Planning) KYTC District #5 Louisville Metro Works	Short
M-7	Develop an area-wide Transportation Demand Management Program (TDM) to reduce peak hour trips	Louisville Metro KIPDA Jeffersontown Chamber of Commerce Area businesses Future Oxmoor Farm businesses Future Shelby Campus businesses	Short
M-8	Implement an Access Management Program to coordinate access management recommendations along the Hurstbourne and Shelbyville Road corridors	Kentucky Transportation Cabinet	Short
M-9	Create a TARC circulator route serving the commercial areas along Shelbyville Road and Hurstbourne Parkway, evaluating routes, stops, and frequency. This alternative might begin as a pilot project implemented during the holiday season.	TARC Area Business Associations	Short
M-10	Develop neighborhood traffic calming plans to determine need (speed control vs. volume control), obtain community input, and select traffic calming techniques and specific locations	City Councils/Neighborhood Associations Louisville Metro Works	Short
M-11	Begin a feasibility study for a Continuous Flow Intersection (CFI) at Shelbyville Road and Hurstbourne Parkway including a cost/benefit analysis	KYTC District #5	Medium
M-12	Start a Scoping and Interchange Justification Study for an interchange on I-64 between I-264 and Hurstbourne Parkway considering both a full and partial interchange	KYTC District #5 Louisville Metro	Long
M-13	Expand the TRIMARC monitoring and freeway management program to include Shelbyville Road and Hurstbourne Parkway	TRIMARC KYTC District #5 Louisville Metro Works Louisville Metro Planning & Design	Long

M-13	Expand the TRIMARC monitoring and freeway management program to include Shelbyville Road and Hurstbourne Parkway	TRIMARC KYTC District #5 Louisville Metro Works Louisville Metro Planning & Design	Long
M-14	St. Margaret Mary to implement a student drop-off plan that strongly encourages increased use of the rear drop-off location to avoid stacking traffic onto Shelbyville Road	St. Margaret Mary	Short
	Infrastructure		
M-15	Restrict westbound left turns to Blue Ridge Road or Relocate Blue Ridge Road to eliminate left turn conflicts between Blue Ridge Road and Dorsey Lane	KYTC District #5 Louisville Metro Works Louisville Metro Planning & Design Blue Ridge Manor	Short
M-16	Conduct a full signal warrant analysis and delay study on Hurstbourne Parkway at Tamarisk Parkway	KYTC District #5	Short
M-17	Form connections between Old Dorsey Place Subdivision and existing signalized intersections on Hurstbourne Parkway	KYTC District #5 Louisville Metro Works Louisville Metro Planning & Design Old Dorsey Place	Short
M-18	Evaluate a signal at Shelbyville Road and Whipps Mill (not needed if M-23 is implemented)	KYTC District #5 Louisville Metro Works Louisville Metro Planning & Design	Short
M-19	Remove 8 Mile Center signal. Possibly relocate signal to Whipps Mill if warranted by M-18	KYTC District #5	Short
M-20	Widen Shelbyville Road westbound to include three through lanes from Whipps Mill Road to Arterburn Drive (or from Christian Way if M-23 is implemented)		Short
M-21	Widen Shelbyville Road eastbound to include three through lanes west of Whipps Mill Road (not needed if M-23 is implemented)	KYTC District #5 Louisville Metro Works Louisville Metro Planning & Design	Short

M-22	Construct planned Whipps Mill / Hurstbourne Parkway / Shelbyville Road connection through Shelby Campus	KYTC District #5 Louisville Metro Works Louisville Metro Planning & Design	Short (2008)
M-23	Extend Christian Way north, across Shelbyville Road, to make connections with New LaGrange Road, North Whipps Mill, and Lyndon Lane	KYTC District #5 Louisville Metro Works Louisville Metro Planning & Design	Short-Medium
M-24	Construct planned Shelbyville Road / Hurstbourne Parkway intersection improvements adding additional left turn lanes (south and eastbound approaches)	KYTC District #5 Louisville Metro Works Louisville Metro Planning & Design	Medium (2010)
M-25	Construct planned widening of southbound Hurstbourne Parkway to three through lanes from Shelbyville Road to Lynn Station Road	KYTC District #5 Louisville Metro Works Louisville Metro Planning & Design	Medium (2011)
M-26	Construct planned I-64 / Hurstbourne Parkway interchange improvements	KYTC District #5 Louisville Metro Works Louisville Metro Planning & Design	Medium (2012)
M-27	Construct Bunsen Parkway extension in one phase	KYTC District #5 Louisville Metro Works Louisville Metro Planning & Design	Medium (2012)
M-28	Improve connection along Blowing Tree Road between Bunsen Parkway and Taylorsville Road, evaluating the feasibility of Blowing Tree Road as a frontage road rather than the primary route to protect existing residences and minimize access points	KYTC District #5 Louisville Metro Works Louisville Metro Planning & Design	Medium (2012)
M-29	Widen Hurstbourne Parkway to six lanes through Taylorsville Road	KYTC District #5 Louisville Metro Works Louisville Metro Planning & Design	Long
M-30	Locate and implement park and ride lots with transit centers at major pedestrian trip generation locations along Hurstbourne and Shelbyville Road	KYTC District #5 Louisville Metro Works Louisville Metro Planning & Design TARC	Long

Recommendations

Hurstbourne Parkway Corridor

Forest Green Blvd. to Shelbyville Rd. (Parkway segment)

- Facilitate Pedestrian and Bike users by providing a multi-use trail on one side of Hurstbourne with sidewalk on other side
- Increase pedestrian friendly atmosphere by adding street trees and lighting between Hurstbourne Lane and sidewalk/shared use path
- Honor historical aspect of Hurstbourne area with informational signage at locations of historical importance
- Gateway/entrance design for Shelby Campus compatible with surrounding entrance signage

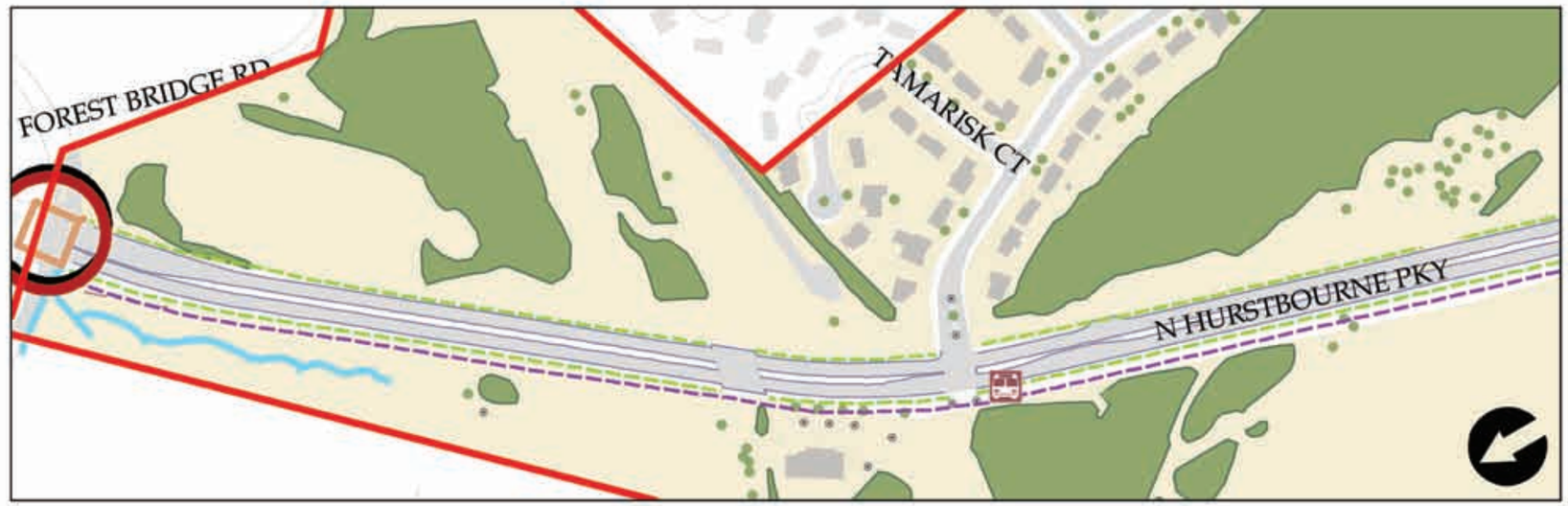

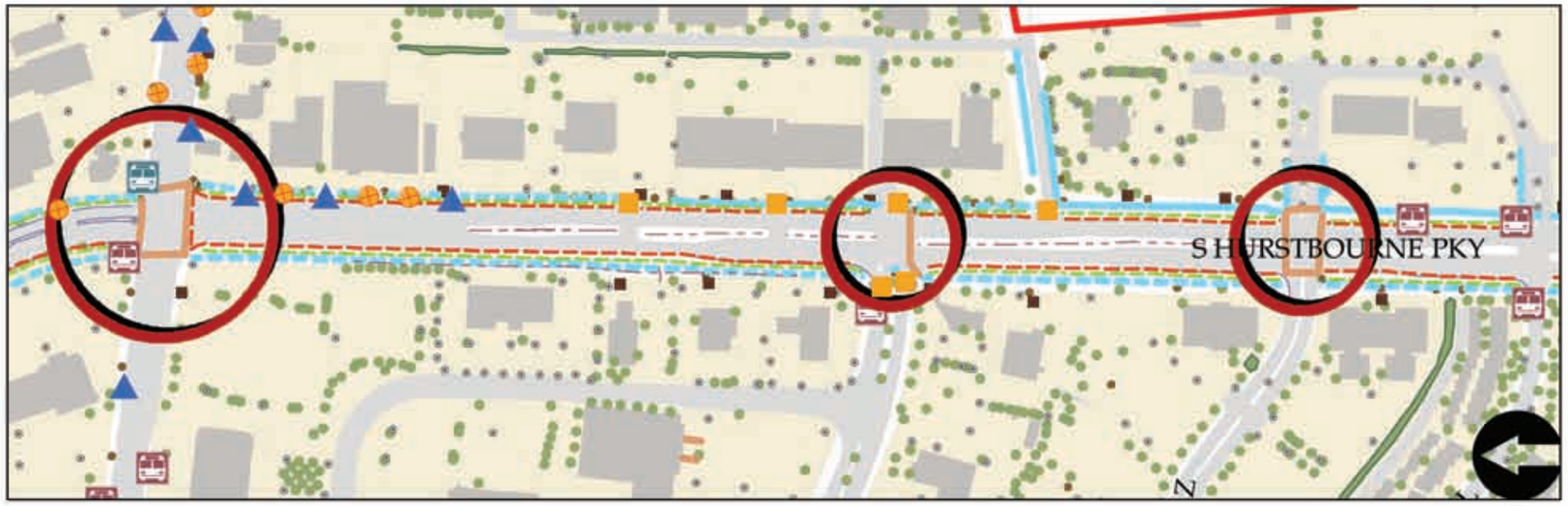

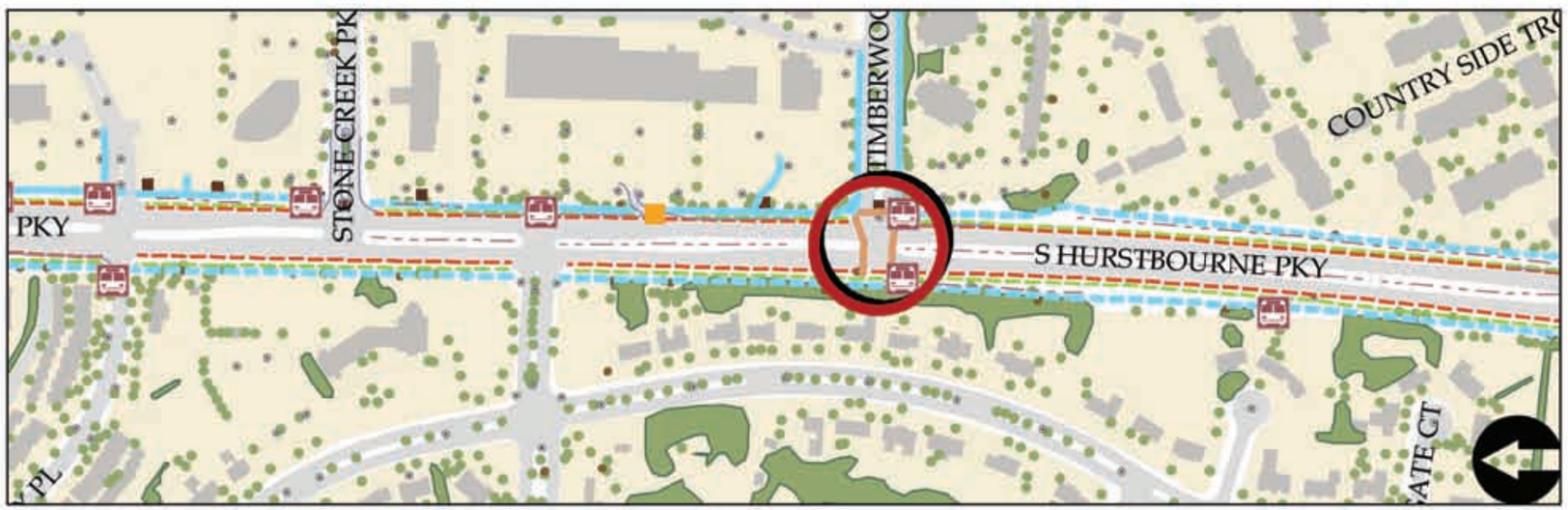

Hurstbourne Parkway Corridor

Shelbyville Road to Timberwood Circle (Suburban Mixed Use segment)

- Continue parkway feel of areas north and south by adding berming and landscaping between commercial areas and roadway through this section of Hurstbourne
- Connect sidewalks by adding new sidewalks in areas where sidewalks are lacking
- Add bike lanes to provide multi-modal opportunities
- Create tree lined verge between sidewalk and Hurstbourne Lane to buffer pedestrians
- Consistent signage standards-monument signage in place of multiple and varying pole signage
- Shared entrance with shared signage where possible

Hurstbourne Parkway Corridor

Timberwood Circle to Hurstbourne Lane (Suburban Mixed Use)

- Shared Use path for bike and pedestrian on one side of roadway with buffer berming and landscaping between the shared use bike path and roadway
- Consistent signage
- Street trees and lighting between commercial and Hurstbourne Parkway
- Berming and larger verges between expansive parking lots and roadway
- Connect existing sidewalk network where lacking
- Add bike lanes to provide additional mobility facilities

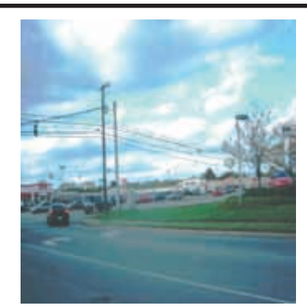

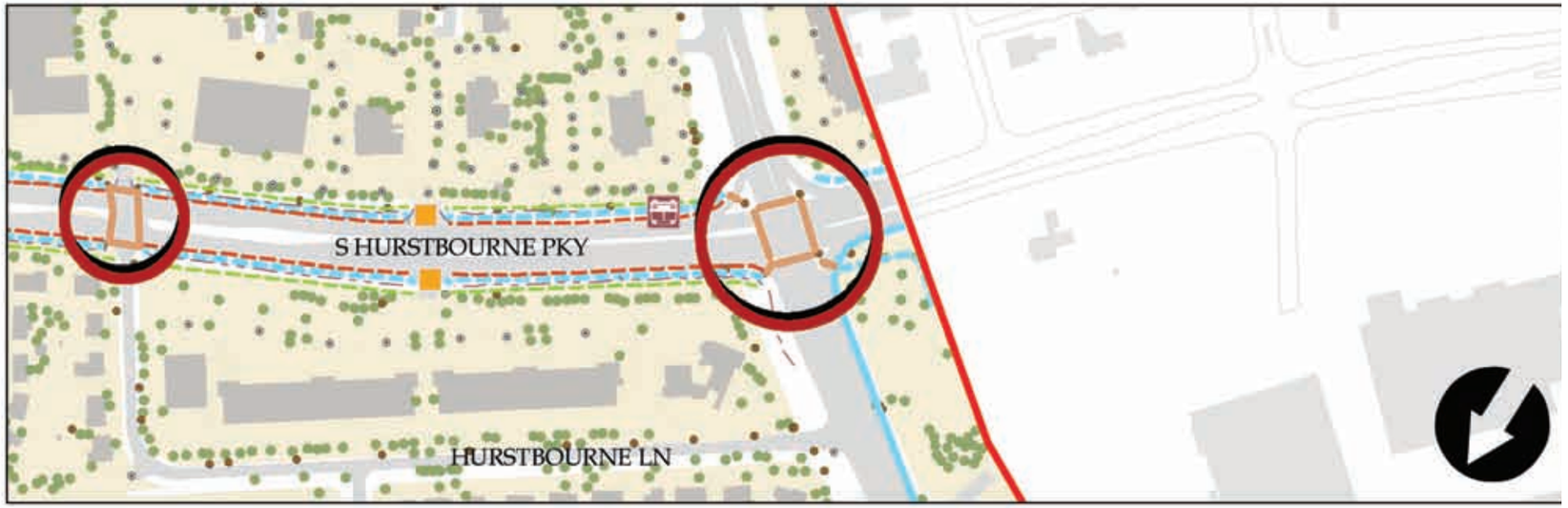

Hurstbourne Parkway Corridor

Hurstbourne Lane to Taylorsville Road (Suburban Commercial use segment)

- Consistent signage
- Street trees and lighting between commercial and Hurstbourne
- Berming and larger verges between expansive parking lots and roadway
- Connect existing sidewalk network where lacking
- Add bike lanes to provide additional mobility facilities

Recommendations

Shelbyville Road Corridor

Watterson Expressway to Lyndon Lane (Commercial segment)

- Encourage shared entrances for better access management
- Add street trees in appropriate areas to improve the street while screening the parking
- Review the intersections and signalization for synchronization
- Review the roadside for adding pedestrian improvements

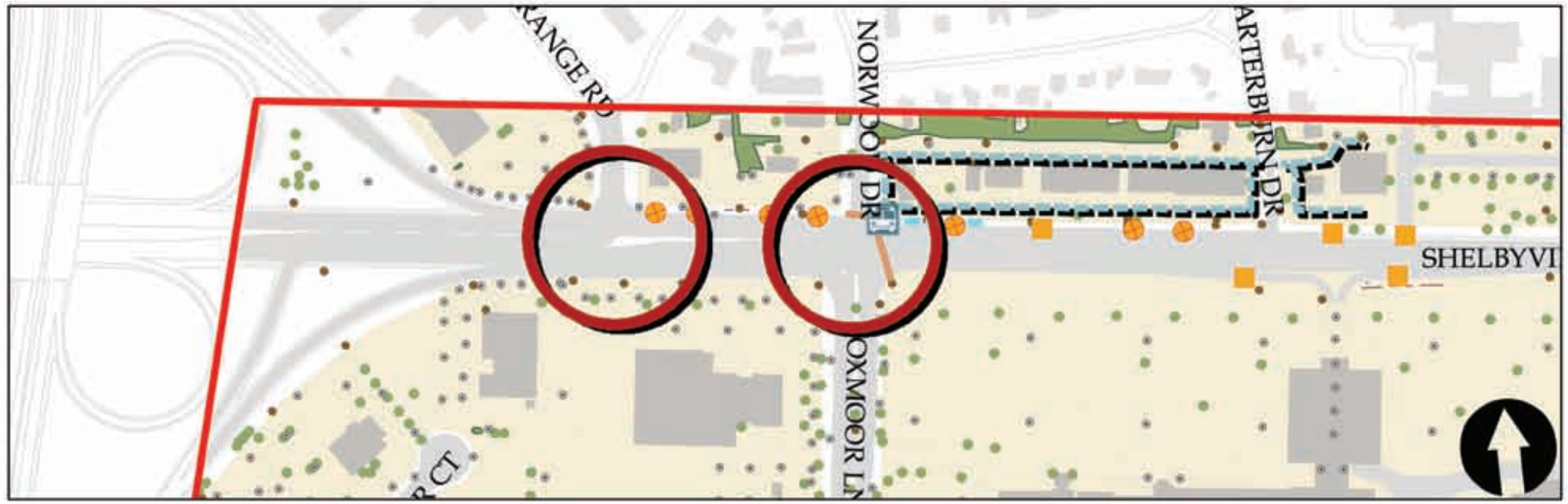

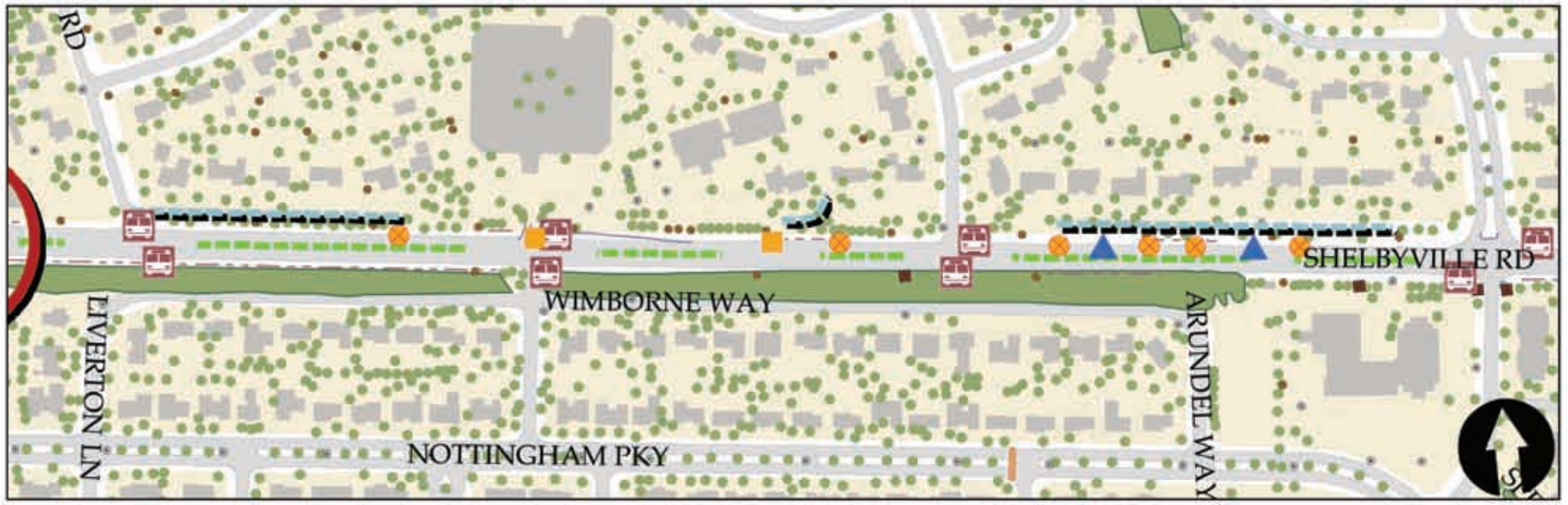

Shelbyville Road Corridor

Lyndon Lane to Hurstbourne Parkway (Residential use segment)

- Follow the existing Maple and Oak tree plantings for future street tree planning
- Encourage frontage roads and shared entrances for better access management
- Review the rural section while preserving the street's character in the residential segment
- See that TARC stops and shelters allow for appropriate mass transit connections

Shelbyville Road Corridor

Shelbyville Road / Hurstbourne Parkway Intersection

- Encourage shared entrances for better access management
- Add street trees and pedestrian facilities in appropriate areas to improve the street's character
- Review the timing cycles at intersections

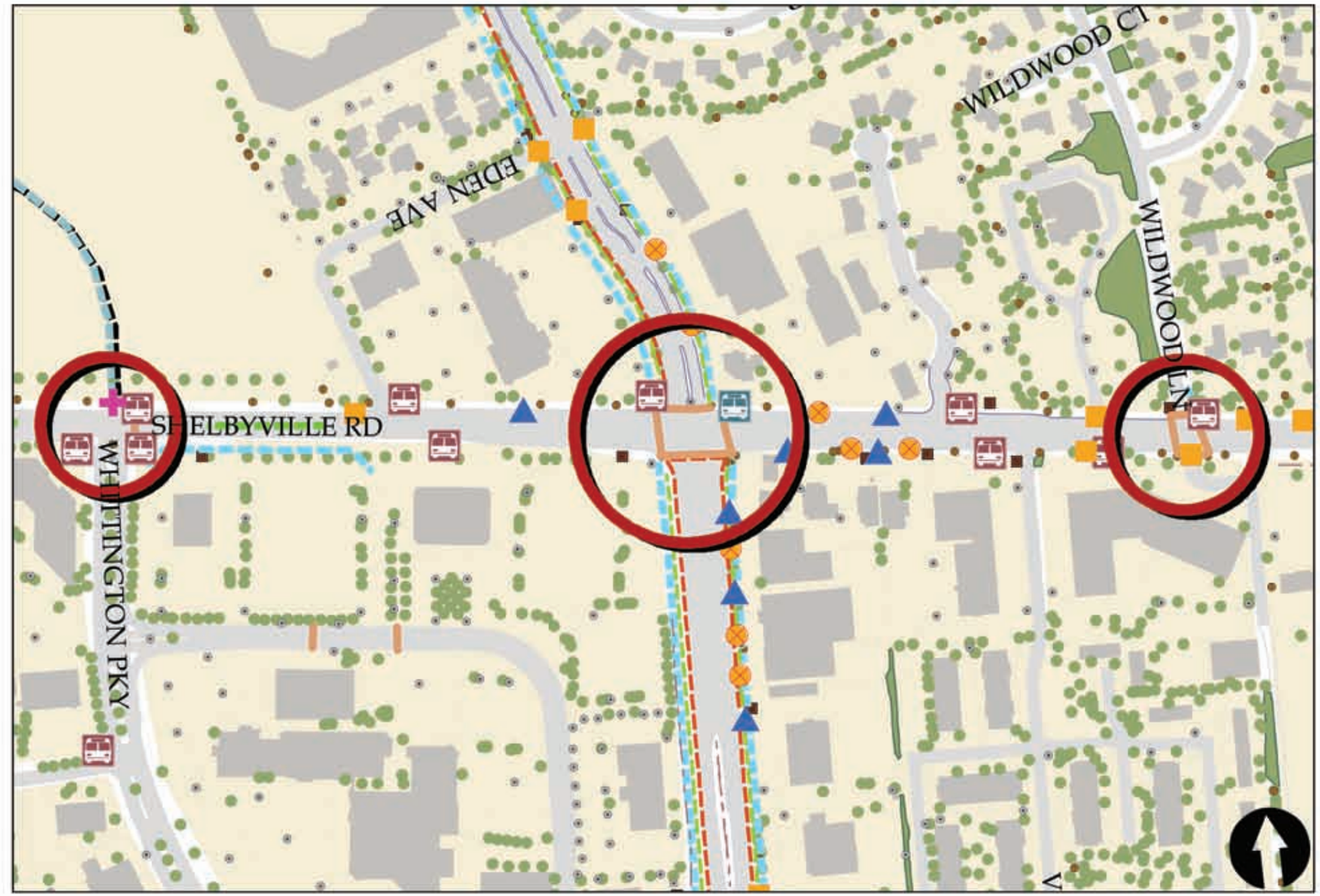

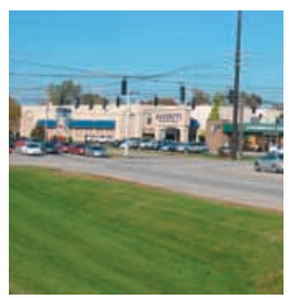

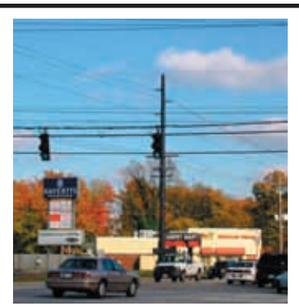

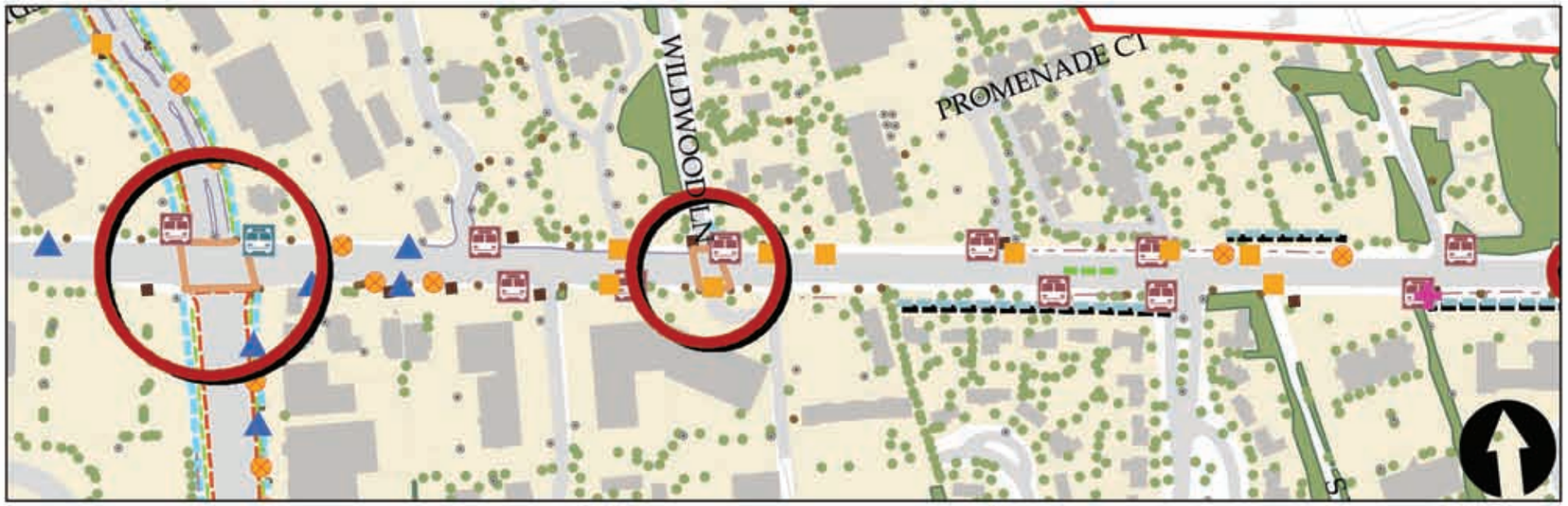

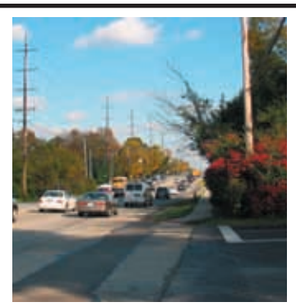

Shelbyville Road Corridor

Hurstbourne Parkway to Moser Road (Residential and Commercial use segment)

- Encourage frontage roads and shared entrances for better access management
- Review streetscape design in light of the greater topography in this area
- Review the rural section while preserving the street's character in the residential segment
- Add street trees and pedestrian facilities in appropriate areas to improve the street's character

Hurstbourne Area Transportation Study

in

Louisville, Kentucky

PREPARED FOR:

Louisville Metro Planning and Design and District 18

December 20, 2006

PREPARED BY:

Gresham Smith and Partners
101 South Fifth Street, Suite 1400
Louisville, KY 40202

Table of Contents

1.0 INTRODUCTION 1

Project Description 1
Purpose 1
Need 1
Goals 1
Scope 1
Traffic Analysis Methodology 2

2.0 EXISTING CONDITIONS 4

Land Use 4
- Hurstbourne Parkway Corridor 4
- Shelbyville Road Corridor 4
- City of Hurstbourne 4
- University of Louisville Shelby Campus 4
- Planned Oxmoor Farm Development 4

Roadway Network 4
- Hurstbourne Parkway 4
- Shelbyville Road 5
- City of Hurstbourne 5
- University of Louisville Shelby Campus 5
- Planned Oxmoor Farm Development 5

Transit Facilities 5
Pedestrian and Bicycle Facilities 6
Existing Traffic Data 6
Traffic Operations and Intersection Levels of Service 6

3.0 FUTURE CONDITIONS 13

Planned Development Projects 13
Planned Roadway Improvements 14
Projected Volumes 15
Traffic Operations and Intersection Levels of Service 15

4.0 POSSIBLE IMPROVEMENTS 20

Area Wide 20
- Transportation Demand Management Program (TDM) 20
- Transportation Systems Management Program (TSM) 21
- Alternative Route Development 22
- Neighborhood Improvement Alternatives 22

Shelbyville Road 25
University of Louisville Shelby Campus 25
Hurstbourne Parkway / Tamarisk Parkway 26

Shelbyville Road - Christian Way to Whipps Mill Road 26
8-Mile Center 26
Whipps Mill Road 27
Access Management 27
Shelbyville Road / Lyndon Lane 28
Shelbyville Road / Hurstbourne Parkway 28
Shelbyville Road / Blue Ridge Road 29
Hurstbourne Parkway / Taylorsville Road 30
I-64 / Bunsen Parkway 30

5.0 RECOMMENDATIONS 46

Reducing Vehicular Trips 46
Traffic Management 46
Development of Traffic Calming Plans 46
Connectivity Between the City of Hurstbourne and the Oxmoor Farm Development 47
Saint Margaret Mary School 47
Increasing Capacity 47
Bunsen Parkway Extension 47
University of Louisville Shelby Campus Roadway 47
Hurstbourne Parkway / Tamarisk Parkway 47
Shelbyville Road – Christian Way to Whipps Mill 48
Shelbyville Road / Hurstbourne Parkway 48
Shelbyville Road / Blue Ridge Road 48
Hurstbourne Parkway / Taylorsville Road 48
I-64 / Bunsen Parkway 48

6.0 IMPLEMENTATION 49

APPENDIX A 52

APPENDIX B 53

APPENDIX C 54

APPENDIX D 55

List of Tables

TABLE 1: Intersection Level of Service Criteria (Signalized) 2
TABLE 2: Intersection Level of Service Criteria (Unsignalized) 2
TABLE 3: Hurstbourne Trip Generation 6
TABLE 4a: Intersection Counts 7
TABLE 4b: Intersection Counts 7
TABLE 5: Existing Level of Service 8
TABLE 6: Oxmoor Farm External Trip Generation 13

TABLE 7: Oxmoor Farm External Trip Distribution 13
TABLE 8: Oxmoor Farm External Trip Distribution % 14
TABLE 9: Total Cut-through 14
TABLE 10: Cut-through by Street 14
TABLE 11: Cut-through Summary 14
TABLE 12: Planned Roadway Improvements 15
TABLE 13: 2009 Level of Service 16
TABLE 14: 2012 Level of Service 17
TABLE 15: 2020 Level of Service 18
TABLE 16: 2030 Level of Service 19
TABLE 17: Alternative Intersection Level of Service Comparison 29
TABLE 18: Hurstbourne Parkway / Taylorsville Road LOS Comparison 30
TABLE 19: Traffic Calming Techniques 31

List of Figures

FIGURE 1: Area Map 3
FIGURE 2: University of Louisville Shelby Campus Master Plan First Stage 9
FIGURE 3: Oxmoor Farm Conceptual Master Plan 10
FIGURE 4: Existing Transit Service Routes 11
FIGURE 5: Tube Count Locations 12
FIGURE 6: Transit Circulator 36
FIGURE 7: Network of Bicycle and Pedestrian Facilities 37
FIGURE 8: Existing Sidewalks in the City of Hurstbourne 38
FIGURE 9: Alternative Routes 39
FIGURE 10: Old Dorsey Place Subdivision Connections 40
FIGURE 11: Continuous Flow Intersections at Shelbyville Road / Hurstbourne Parkway 41
FIGURE 12: Blue Ridge Manor Option A 42
FIGURE 13: Blue Ridge Manor Option B 43
FIGURE 14: Full Interchange 44
FIGURE 15: Partial Interchange 45

1.0 INTRODUCTION

The Hurstbourne Area Transportation Study is a large part of The Hurstbourne Area Small Area Plan. The study area map is shown in **Figure 1**. A summary of the findings and recommendations found herein make up the mobility section of the Small Area Plan and can be found in the Implementation chapter of this report. The Small Area Plan will first be considered for adoption by the Metro Louisville Planning Commission during a regularly scheduled public hearing. After hearing testimony on the plan recommendations, the Planning Commission will make a recommendation to the Louisville Metro Council for its consideration of the Plan. Cornerstone 2020 or the Land Development Code recommendations that are adopted by the Metro Council will become part of Metro Louisville's Comprehensive Plan, to be considered in future land use decisions within the Hurstbourne study area. The Plan's infrastructure recommendations support the current and proposed Cornerstone 2020 goals and objectives as well as serving as a starting point for design.

Project Description

The Transportation Study and Small Area Plan was initiated by Councilwoman Julie Raque Adams and Metro Louisville's Department of Planning and Design Services in 2004. Gresham, Smith and Partners was selected to conduct the study and develop the plan in 2005. The study area is one of the most highly traveled areas in Louisville Metro, adjacent to two interstate highways, including two urban principal arterials and several incorporated cities of various classes.

A Study Advisory Team (SAT) was appointed by Metro Louisville Mayor Jerry Abramson to guide the project toward the community vision for the area. The SAT included representatives from area cities, neighborhoods, and businesses, as well as representatives from Council District 18 and various state and Metro Louisville agencies.

Based on roadway improvements, development, and growth, the anticipated future traffic conditions in the area were analyzed. Possible improvements were reviewed and analyzed and recommendations were made. The recommendations of this study which are contained in the Small Area Plan were developed to guide future public and private projects to improve mobility in the area in a manner consistent with the community vision.

Purpose

The purpose of the Hurstbourne Area Transportation Study and Small Area Plan is to analyze traffic, mobility, safety and land use conditions and recommend opportunities for improvement. The transportation study component reviewed traffic flow, safety, developmental growth, alternate routes, modal choice possibilities, access management and aesthetics, and recommended possible improvements; it included traffic analyses, traffic modeling, trip generation and review of accident data. Elements of the small area plan include plan area identity, a vision statement, land use, mobility, community design and implementation. The plan provided recommendations to improve the character and function of the marketplace corridors, strengthen and preserve the residential neighborhoods and create better transitions between the two. There was a considerable public involvement element including Key Person Interviews, a Study Advisory Team, Open Houses and Town Meetings. Key Person Interviews helped establish or refine the project purpose and need and project goals. The public involvement meeting sign-in sheets and comment forms are located in **Appendix A**.

Need

The need for the transportation study and small area plan originated from concerns over additional planned development within this already congested area -- in particular plans for developing the 386 acre Oxmoor Farm as well as the University of Louisville's Shelby Campus. Several cities, especially the City of Hurstbourne, already experience considerable cut through traffic to and from two regional malls adjacent to the study area. Thus, the concerns that caused the study to be initiated are 1) traffic congestion, 2) impacts of planned major developments, 3) cut through traffic in neighborhoods, and 4) a need for a collective community vision. For area residents as well as motorists, the focus is on quality of life issues.

The need for the project is demonstrated by

- Traffic congestion
- Planned developmental growth
- Lack of alternate routes
- Lack of modal choices – transit, pedestrian and bike challenges
- Inefficient access management on arterials
- Community concerns over cut-through traffic

Goals

The goals of the study were to:

- Identify and analyze problems
- Review selected major development proposals
- Review impacts of currently planned road improvements
- Make recommendations to improve traffic flow, mobility and safety
- Prioritize recommendations into short, medium and long range improvements
- Maintain or enhance quality of life in City of Hurstbourne and other communities
- Maintain a vibrant economic corridor
- Explore and propose improvements in multi-modal transportation
- Recommend aesthetics improvements on major arterials

Scope

The existing (2006) infrastructure, transit system, and traffic conditions in the area were reviewed. The future traffic conditions in the area were analyzed based on traffic projections from the Kentuckiana Regional Planning and Development Authority's (KIPDA's) traffic demand model. Traffic conditions were analyzed for 2009, 2012, 2020, and 2030.

The intersections analyzed included:

- Shelbyville Road & Christian Way
- Shelbyville Road & 8-Mile Center
- Shelbyville Road & Whipps Mill Road
- Shelbyville Road & Lyndon Lane

- Shelbyville Road & Whittington Parkway
- Shelbyville Road & Hurstbourne Parkway
- Shelbyville Road & Blue Ridge Road
- Shelbyville Road & Dorsey Lane
- Hurstbourne Parkway & Taylorsville Road
- Hurstbourne Parkway & Linn Station Road
- Hurstbourne Parkway & Whittington Parkway
- Hurstbourne Parkway & Tamarisk Parkway
- Hurstbourne Parkway & Westport Road

Potential options for mobility improvements vary from large to small scale and from short to long term projects. The improvements aim to address traffic congestion, safety, and quality of life. Some of the projects are currently proposed and in the planning phases, others are being presented in this document for the first time. Beyond presenting the options in the study area, a series of preferred recommendations are listed in the plan implementation section. They are listed along with the implementing agency and a proposed timeframe. Successful road improvements should be timed and orchestrated to meet traffic needs and future development.

Traffic Analysis Methodology

The traffic analysis was performed using Highway Capacity Software, HCS+ Version 5.2, which uses procedures and methodologies documented in the latest edition of the *Highway Capacity Manual* (HCM). This methodology uses the average delay per vehicle to determine the Level of Service (LOS) for each intersection.

All intersections in this report are evaluated in terms of LOS, which is a measure of driving conditions and delay. Levels of service range from LOS A (free-flow conditions, no delay) to LOS F (severe congestion and delay). LOS A, B, and C generally indicate satisfactory driving conditions. LOS D indicates conditions in which there is noticeable delay. LOS E indicates traffic operating at or close to capacity, producing significant delays. LOS F indicates facilities operating above volume capacity, resulting in severe delays and queuing at signalized intersections. **Table 1** and **Table 2** outline the HCM 2000 LOS definitions for signalized and unsignalized intersections, respectively. The LOS for signalized intersections is determined by using the average control delay for all vehicles at the intersection. The LOS for two-way stop-controlled (unsignalized) intersections is determined by control delay and is defined for each minor movement.

TABLE 1: Intersection Level of Service Criteria (Signalized)

Level of Service	Delay Range
A	< or = 10 seconds
B	> 10 seconds and < 20 seconds
C	> 20 seconds and < 35 seconds
D	> 35 seconds and < 55 seconds
E	> 55 seconds and < 80 seconds
F	> 80 seconds

TABLE 2: Intersection Level of Service Criteria (Unsignalized)

Level of Service	Delay Range
A	< or = 10 seconds
B	> 10 seconds and > 15 seconds
C	> 15 seconds and > 25 seconds
D	> 25 seconds and > 35 seconds
E	> 35 seconds and > 50 seconds
F	> 50 seconds

Traffic projections (design hour traffic volumes) KIPDA derived from its traffic demand model are taken as baseline volumes since they assume the implementation of planned roadway improvement projects and account for regional growth and development. The signal timings used for the existing and baseline analysis were optimized with the appropriate cycle length for the signals included in a coordinated system and estimated for the uncoordinated signals. HCS+ was used for the estimation and optimization of the signals for each scenario so the phase times may vary between years and peak hours as traffic volumes change.

FIGURE 1: Area Map

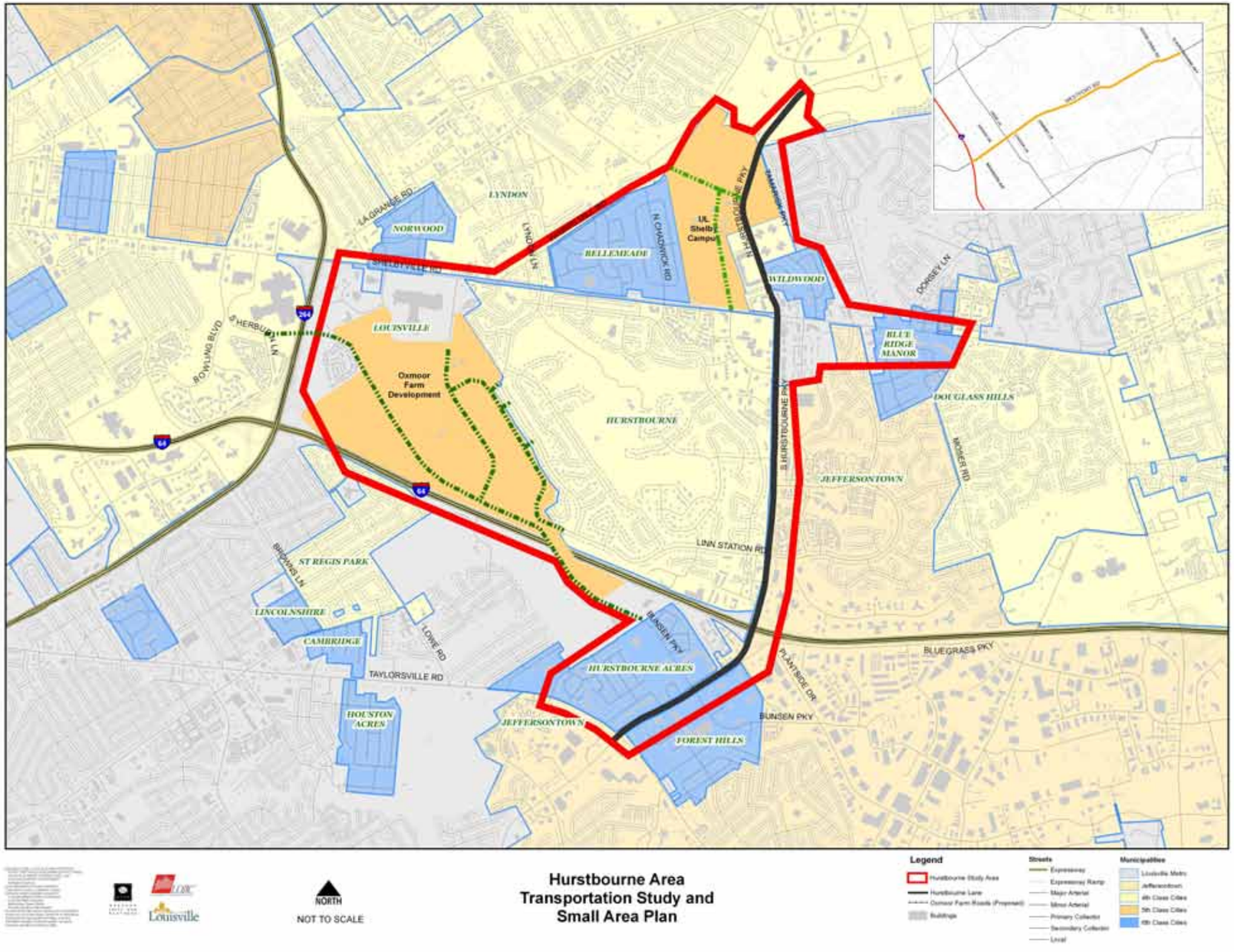

2.0 EXISTING CONDITIONS

This chapter describes the existing transportation conditions in the study area, including the existing land uses, roadway network, transit facilities, pedestrian and bicycle facilities, and existing levels of service at the study intersections. Physical data was obtained from LOJIC (Louisville/Jefferson County Information Consortium) and supplemented with field data. The current traffic concerns in the study area include arterial congestion on Shelbyville Road and Hurstbourne Parkway, cut-through traffic and speeding on local streets in the cities of Hurstbourne and Bellemeade, and a lack of multimodal opportunities.

Land Use

Hurstbourne Parkway Corridor

Existing land uses along the Hurstbourne Parkway corridor are mixed-use with primarily commercial, occasional institutional uses and some residential. The areas that are not commercial or institutional include:

Forest Green Boulevard to Shelbyville Road

- Multiple properties are vacant with potential for development
- A research and development campus is proposed for UofL Shelby Campus

Shelbyville Road to Linn Station Road

- Residential along the west side from Wessex Place to Linn Station Road

Shelbyville Road Corridor

Existing land uses along the Shelbyville Road corridor are a mixture of commercial and residential with occasional institutional uses. More specifically, the uses in the following areas are:

I-264 to Whipps Mill Road

- Regional Mall
- Commercial
- St. Margaret Mary Catholic Church/School

Whipps Mill Road to UofL Shelby Campus Entrance

- Residential

UofL Shelby Campus Entrance to Wildwood Lane

- Commercial

Wildwood Lane to Moser Road

- Mixture of residential, commercial, and institutional

City of Hurstbourne

The City of Hurstbourne is primarily single family residential. There are commercial and multi-family residential uses along the perimeter near Linn Station Road and the intersection of Shelbyville Road and Hursbourne Parkway along Whittington Parkway. There are institutional uses scattered along Shelbyville Road and Hurstbourne Parkway and there is a country club in the center of the community.

University of Louisville Shelby Campus

The existing land use of the University of Louisville Shelby Campus is institutional. Future development of the site is planned as a research and development campus. The first phase of the preliminary development plan is shown in **Figure 2**.

Planned Oxmoor Farm Development

The existing Oxmoor farm is zoned to be developed with a mixture of land uses with proposed residential uses near the existing residences in the City of Hurstbourne and office and retail uses near the interstates of I-64 and I-264. The approved Conceptual Master Plan is shown in **Figure 3**.

Roadway Network

Hurstbourne Parkway

Hurstbourne Parkway is a principal arterial running north-south through the study area and is designated as KY 1747. Hurstbourne Parkway is a limited access arterial with transit stops, but has limited sidewalks and pedestrian connectivity despite the heavy pedestrian use. More specifically the roadway characteristics in the following areas are:

Forest Green Boulevard to Shelbyville Road

- Four lane
- Curb and gutter
- Raised grass median
- No sidewalk
- Obstructed sight lines for many commercial entrances near Shelbyville Road creating safety and traffic flow concerns

Shelbyville Road to Linn Station Road

- Three lanes northbound
- Two lanes southbound
- Paved shoulder west side
- Curb and gutter east side
- Depressed grass median
- Multiple entrances to commercial uses along the east side near Shelbyville Road

Linn Station Road to I-64

- Six lanes
- Curb and gutter
- Raised concrete barrier median
- TARC stop with shelter at Mc Donalds
- Frontage road along the east side
- Backage road (Liberty Bank Lane) along the west side
- Multiple entrances to commercial uses along the west side

I-64 to Bunsen Parkway

- Six lanes
- Paved shoulder
- Depressed grass median
- No sidewalks
- Multiple entrances to commercial uses along the west side near I-64

Bunsen Parkway to Taylorsville Road

- Six lanes
- Curb and gutter
- Depressed grass median
- No sidewalks
- Good access management

Shelbyville Road

Shelbyville Road is a principal arterial running east-west through the study area and is designated as US 60. Shelbyville Road has transit stops with shelters but no sidewalks for pedestrian access. Access management along Shelbyville Road is poor in the commercial areas. More specifically the roadway characteristics in the following areas are:

I-264 to Whipps Mill Road

- Six lanes eastbound to Christian Way
- Six lanes westbound from Arterburn Drive
- Curb and gutter
- Two way left turn lane
- TARC stops with shelters at Wendys and Oxmoor Mall
- Multiple entrances to commercial uses along the north side

Whipps Mill Road to UofL Shelby Campus Entrance

- Four lanes
- Narrow unpaved shoulders
- Two way left turn lane
- Wooded buffer area along south side
- TARC stops with shelters at UofL
- Good access management with frontage roads

UofL Shelby Campus Entrance to Wildwood Lane

- Four lanes
- Curb and gutter
- Two way left turn lane
- TARC stops with shelters at Hurstbourne Parkway
- Multiple entrances to commercial uses

Wildwood Lane to Moser Road

- Four lanes
- Narrow unpaved shoulders
- Two way left turn lane
- TARC stops with shelters at Moser Road

City of Hurstbourne

The roadway network in the City of Hurstbourne is made up of wide parkways with adjoining side streets, loops and cul-de-sacs. The parkways of Nottingham, Colonel Anderson, Oxmoor Woods, Linn Station, Seaton Springs, Whittington, and Lyndon are divided roadways with raised grass/landscaped medians, 18'-wide lanes, and curb and gutter. There are no transit stops in the City of Hurstbourne as there is no transit service. There are no sidewalks in the northern part of the city. The sidewalks are limited to the parkways of Colonel Anderson, Oxmoor Woods, Linn Station, and Nottingham south of Seaton Springs Parkway and their adjoining streets.

University of Louisville Shelby Campus

Existing connections from the University of Louisville Shelby Campus are to Shelbyville Road and Whipps Mill Road. Future connections are planned on Whipps Mill Road, Hursbourne Parkway, Hurstbourne Trace, and Shelbyville Road at Whittington Parkway. The planned campus setting is intended to create a walking environment.

Planned Oxmoor Farm Development

Existing connections from the Oxmoor farm are to Shelbyville Road at Oxmoor Lane and Christian Way and to the City of Hurstbourne at Oxmoor Woods Parkway. Future additional connections are planned to Linn Station Road, Cheffield Drive, Stamford Drive, Lincolnshire Drive, over I-264 to Bowling Boulevard, and over I-64 to Bunsen Parkway and an extension of Blowing Tree Road. Construction of the approved plan will be done in phases which are tied to the construction of the Bunsen Parkway extension. Pedestrian connections are planned throughout the development as well as to adjoining residential properties.

Transit Facilities

The existing transit service in the area is provided by the Transit Authority of River City (TARC) with the following seven routes which are also shown in **Figure 4**:

Route #	Route Name	Serving
31	Middletown	Shelbyville Road
58	Bashford Manor/Oxmoor	Oxmoor Mall
29	Eastern Parkway	Oxmoor Mall
19	Muhammad Ali	Oxmoor Mall
61	Plainview Express	Shelbyville Road and Hurstbourne Parkway
80	Hurstbourne Parkway	Hurstbourne Parkway
78	Downtown/Bluegrass Express	Hurstbourne Parkway

There are three Park & Ride lots in the study area including:

- Middletown Station Parking Lot at 12975 Shelbyville Rd
- Hurstbourne Baptist Church at 8800 Shelbyville Rd
- Trinity Presbyterian Church at 10200 Shelbyville Rd

Pedestrian and Bicycle Facilities

Census statistics confirm that most people are choosing cars over riding the bus, biking and walking. Roughly 85% of the commuters drive alone while 5% carpool and 6% work from home. Less than 2% of commuters used public transportation, walked, or bicycled to work. Sidewalks along the corridors of Shelbyville Road and Hurstbourne Parkway are very limited and not consistent where they do exist. There are no sidewalks in the residential areas in the cities of Bellemeade, Wildwood, Blue Ridge Manor, or Hurstbourne Acres and only half of the City of Hurstbourne. There are no bike lanes in the study area.

Existing Traffic Data

The existing traffic data collected included travel time runs, automatic tube counts, and intersection turning movement counts throughout the study area. The automatic tube counts were collected at nine locations that delineated a perimeter around the residential portion of the City of Hurstbourne. The locations of the tube counts are shown in **Figure 5**. The counts were collected between November 2 and November 18, 2005, for 24 hours each. Theoretically, during an average day, the number of trips that enter an area equal the number of trips that exit the area. The counts were factored with a 1.02 monthly variation factor (from 2006 KYTC count data) and a 0.97 axle factor (from the KYTC 2004 Traffic Forecasting Report). The summation of all of the 24 hour counts entering the area was 11,715 vehicles. The summation of all of the 24 hour counts exiting the area was 11,741 vehicles. The balance of these counts, a difference of only 26 trips (0.2%), indicates excellent reliability. The automatic tube counts are shown in **Appendix B**.

Based on average trip generation rates published in the Institute of Transportation Engineers (ITE), *Trip Generation Manual*, 7th Edition, 2003, **Table 3** shows the trip generation expected for this area:

TABLE 3: Hurstbourne Trip Generation

Land Use		Daily Trips
Single Family Detached Residential	1,273 units	10,800
Hurstbourne Country Club	27 holes	1,000
Lowe Elementary School	58.4 k sf	870
Our Savior Lutheran Church and School	40.1 k sf	581
Hurstbourne Baptist Church	35.3 k sf	322
Church of Jesus Christ	26.9 k sf	245
Hurstbourne Christian Church	14.9 k sf	136
	Total	13,954

With approximately 23,450 daily trips counted and approximately 14,000 daily trips expected based on land uses inside the area, approximately 40% of the trips are not expected to be destined to or originating from the area.

Travel time data was collected along Shelbyville Road and Hurstbourne Parkway and various routes through the City of Hurstbourne. The data was collected throughout the day including peak hours and off peak hours. The travel times were measured between the intersections of Shelbyville Road at Oxmoor Lane and Hurstbourne Parkway at Linn Station Road. The results of the travel time runs indicate that it takes as much time or less to travel through the City of Hurstbourne than it does to travel along Shelbyville Road and Hurstbourne Parkway. It takes a little over seven minutes to travel between those two intersections via the City of Hurstbourne while obeying all traffic laws (speed limits, stop signs, etc.). Depending on the signals and the time of day, it takes 7-18 minutes to travel between those two intersections via Shelbyville Road and Hurstbourne Parkway. This would account for the high percentage of traffic cutting through the City of Hurstbourne between Shelbyville Road and Hurstbourne Parkway.

The traffic counts obtained and their sources are listed in **Table 4.** The sources are as follows:

- Oxmoor Farm – Oxmoor Farm Rezoning Traffic Impact Study (2002)
- GS&P – Gresham, Smith and Partners
- KIPDA – Kentuckiana Regional Planning and Development Authority
- GRW/KYTC – Design volumes provided to GRW by the KYTC for proposed improvements to the intersection of Shelbyville Road and Hurstbourne Parkway and the southbound widening of Hurstbourne Parkway
- UL – University of Louisville Shelby Campus Traffic Impact Study (2004)
- KYTC – Kentucky Transportation Cabinet

The peak hour volumes for the analyzed intersections are summarized from the counts in **Appendix C**. Growth factors based on historical traffic trends were applied to estimate existing (2005) traffic volumes from older counts. Seasonal factors were also applied where appropriate.

Traffic Operations and Intersection Levels of Service

The existing levels of service at the analyzed intersections are shown in **Table 5** and the associated HCS+ output is in **Appendix D**.

TABLE 4a: Intersection Counts

Location	Date	Time	Source
Taylorsville Road at Blowing Tree	5/2/2000	AM/PM	Oxmoor Farm
Hurstbourne Parkway at:			
Taylorsville Road	11/2/2005	AM/PM	GS&P
Bunsen Parkway	2001	ADT	KIPDA
	5/2/2000	AM/PM	Oxmoor Farm
Bluegrass Parkway	2001	ADT	KIPDA
I-64 EB on Ramp	2000	ADT	KIPDA
I-64 WB Ramps	2000	ADT	KIPDA
Linn Station Road	2003	AM/PM	GRW/KYTC
	2001	ADT	KIPDA
Timberwood Circle	2003	AM/PM	GRW/KYTC
	2001	ADT	KIPDA
Williamsburg Plaza	2003	AM/PM	GRW/KYTC
Wessex Place	2003	AM/PM	GRW/KYTC
Stone Creek	2003	AM/PM	GRW/KYTC
Seaton Springs	2003	AM/PM	GRW/KYTC
Whittington Parkway	2004	AM/PM	UL
	2003	AM/PM	GRW/KYTC
Shelbyville Road	2004	AM/PM	UL
	2003	AM/PM	GRW/KYTC
	4/18/2000	AM/PM	Oxmoor Farm
Forum Office Park	2004	AM/PM	UL
Ormsby Station/Forest Green	2004	AM/PM	UL
Tamarisk Parkway	8/23/2005	AM/PM	KYTC
Westport Road	11/3/2005	AM/PM	GS&P

TABLE 4b: Intersection Counts

Location	Date	Time	Source
Taylorsville Road at Blowing Tree	5/2/2000	AM/PM	Oxmoor Farm
Shelbyville Road at:			
Oxmoor Lane	4/25/2000	AM/PM	Oxmoor Farm
Bellmeade Road	10/27/2005	AM	GS&P
	11/10/2005	PM	GS&P
Chadwick Road	10/27/2005	AM	GS&P
	11/10/2005	PM	GS&P
St. Margaret Mary	11/9/2005	AM/PM	GS&P
Christian Way	11/8/2005	AM/PM	GS&P
	4/6/2000	AM/PM	Oxmoor Farm
8-Mile Center	11/9/2005	AM/PM	GS&P
	8/7/2000	PM	KYTC
Whipps Mill Road	3/8/2006	AM/PM	GS&P
	2/27/2002	PM	KYTC
	4/25/2000	AM/PM	Oxmoor Farm
Lyndon Lane	3/9/2006	AM/PM	GS&P
	4/26/2000	AM/PM	Oxmoor Farm
Whittington Parkway	3/7/2006	AM/PM	GS&P
	2004	AM/PM	UL
Blue Ridge Road	10/26/2005	AM/PM	GS&P
Dorsey Lane	5/10/2004	AM/PM	KYTC
Moser Road	5/6/2004	AM/PM	KYTC

TABLE 5: Existing Level of Service

	Time	Street Names		Eastbound			Westbound			Northbound			Southbound			Approach				Overall
				L	T	R	L	T	R	L	T	R	L	T	R	Eb.	Wb.	Nb.	Sb.	
2005	A.M.	Linn Station	Hurstbourne Pky	E	F	F	F	E	E	D	D	D	F	F	**	**F**	**F**	**D**	**F**	**F**
	P.M.	Linn Station	Hurstbourne Pky	E	F	F	F	E	D	F	F	D	F	F	**	**F**	**F**	**F**	**F**	**F**
	A.M.	8 Mile Center	Shelbyville Rd	D	A	**	D	A	A	**	D	**	D	D	**	**A**	**A**	**D**	**D**	**A**
	P.M.	8 Mile Center	Shelbyville Rd	F	A	**	E	A	A	**	E	**	F	F	**	**A**	**A**	**E**	**F**	**A**
	A.M.	Christian Way	Shelbyville Rd	A	B	A	D	A	**	F	D	D	**	D	**	**B**	**A**	**F**	**D**	**B**
	P.M.	Christian Way	Shelbyville Rd	A	C	B	F	B	**	F	D	F	**	D	**	**C**	**C**	**F**	**D**	**D**
	A.M.	Dorsey Ln	Shelbyville Rd	B	A	A	B	C	**	C	C	**	E	C	C	**B**	**C**	**C**	**D**	**C**
	P.M.	Dorsey Ln	Shelbyville Rd	D	A	A	C	D	**	D	D	**	F	D	D	**B**	**D**	**D**	**F**	**D**
	A.M.	Shelbyville Rd	Hurstbourne Pky	F	D	D	E	F	**	F	F	D	F	E	E	**F**	**F**	**F**	**F**	**F**
	P.M.	Shelbyville Rd	Hurstbourne Pky	F	F	D	F	F	**	F	F	D	F	E	D	**F**	**F**	**F**	**F**	**F**
	A.M.	Lyndon Ln	Shelbyville Rd	E	C	**	D	B	A	E	C	**	**	F	**	**C**	**B**	**E**	**F**	**C**
	P.M.	Lyndon Ln	Shelbyville Rd	F	C	**	E	C	B	D	D	**	**	F	**	**C**	**C**	**D**	**F**	**C**
	A.M.	Whittington	Shelbyville Rd	**	B	B	D	A	**	D	**	C	**	**	**	**B**	**A**	**D**	**	**B**
	P.M.	Whittington	Shelbyville Rd	**	D	C	D	C	**	D	**	C	**	**	**	**D**	**C**	**D**	**	**C**
	A.M.	Taylorsville Rd	Hurstbourne Pky	F	D	D	E	E	F	F	F	D	F	D	D	**F**	**F**	**F**	**F**	**F**
	P.M.	Taylorsville Rd	Hurstbourne Pky	F	F	E	F	F	E	D	F	D	F	F	F	**F**	**F**	**E**	**F**	**F**
	A.M.	Westport Rd	Hurstbourne Pky	D	D	D	F	C	C	D	C	C	D	D	C	**D**	**E**	**C**	**D**	**D**
	P.M.	Westport Rd	Hurstbourne Pky	E	E	D	F	D	C	F	D	F	E	D	D	**E**	**E**	**E**	**D**	**E**
	A.M.	Whittington	Hurstbourne Pky	**	F	F	**	F	F	E	B	**	D	C	B	**F**	**F**	**C**	**C**	**C**
	P.M.	Whittington	Hurstbourne Pky	**	E	D	**	D	D	F	C	**	F	E	C	**E**	**D**	**D**	**E**	**D**
	A.M.	Whippsmill Rd	Shelbyville Rd	C	**	**	B	**	**	**	F	**	X	**	E	**	**	**X**	**X**	**
	P.M.	Whippsmill Rd	Shelbyville Rd	C	**	**	B	**	**	**	F	**	E	**	D	**	**	**X**	**D**	**
	A.M.	Blue Ridge	Shelbyville Rd	B	**	**	A	**	**	B	**	A	**	**	**	**	**	**B**	**	**
	P.M.	Blue Ridge	Shelbyville Rd	B	**	**	B	**	**	D	**	B	**	**	**	**	**	**C**	**	**
	A.M.	Tamarisk	Hurstbourne Pky	**	D	**	D	**	B	B	**	**	A	**	**	**D**	**C**	**	**	**
	P.M.	Tamarisk	Hurstbourne Pky	**	C	**	C	**	A	B	**	**	A	**	**	**C**	**C**	**	**	**

** Indicates that the data is not applicable because a dedicated lane does not exist for that movement or that the data is not available for the uncontrolled movements at the unsignalized intersections
X Indicates that the delay exceeds the capacity of the software

FIGURE 2: University of Louisville Shelby Campus Master Plan First Stage

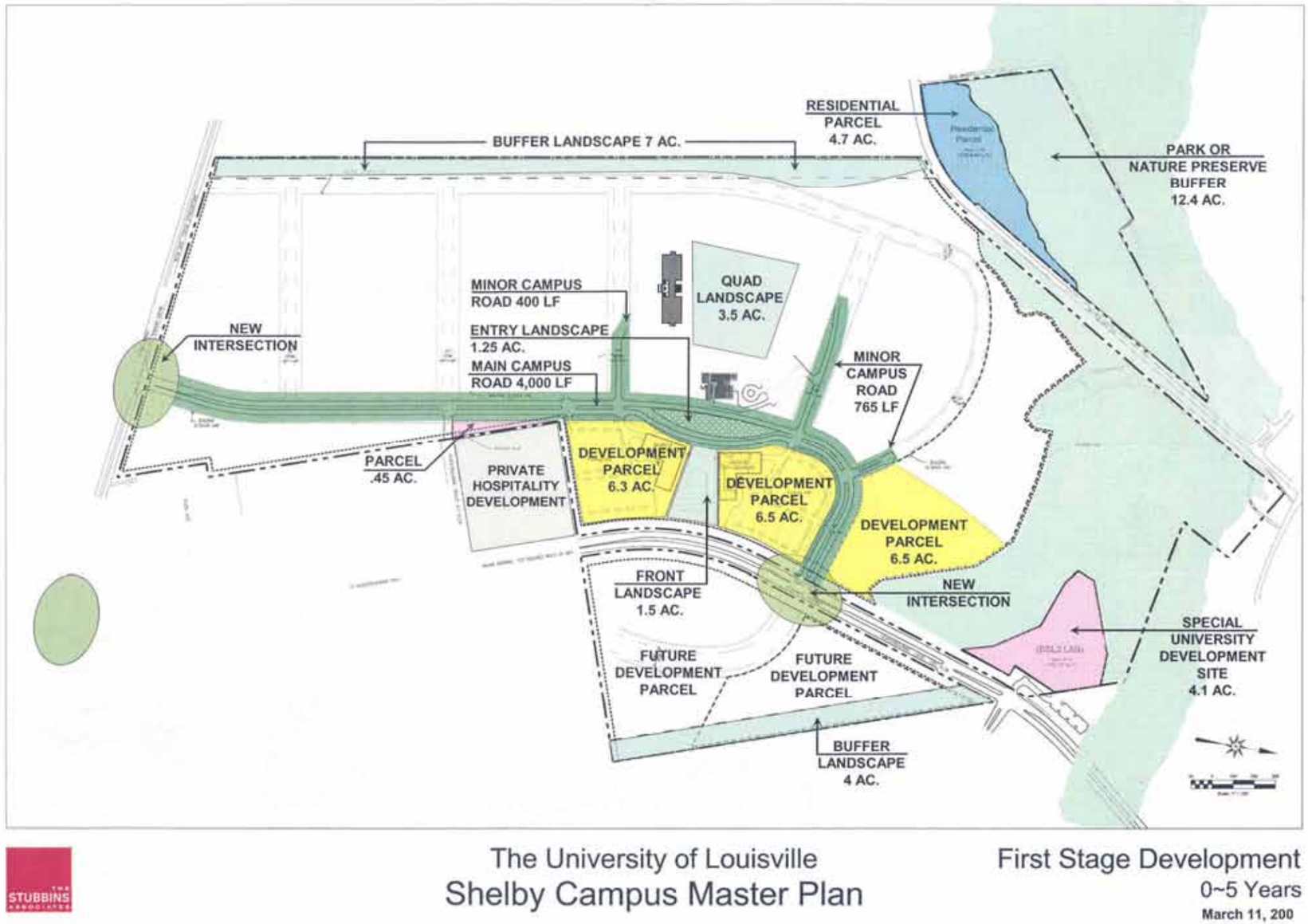

FIGURE 3: Oxmoor Farm Conceptual Master Plan

FIGURE 4: Existing Transit Service Routes

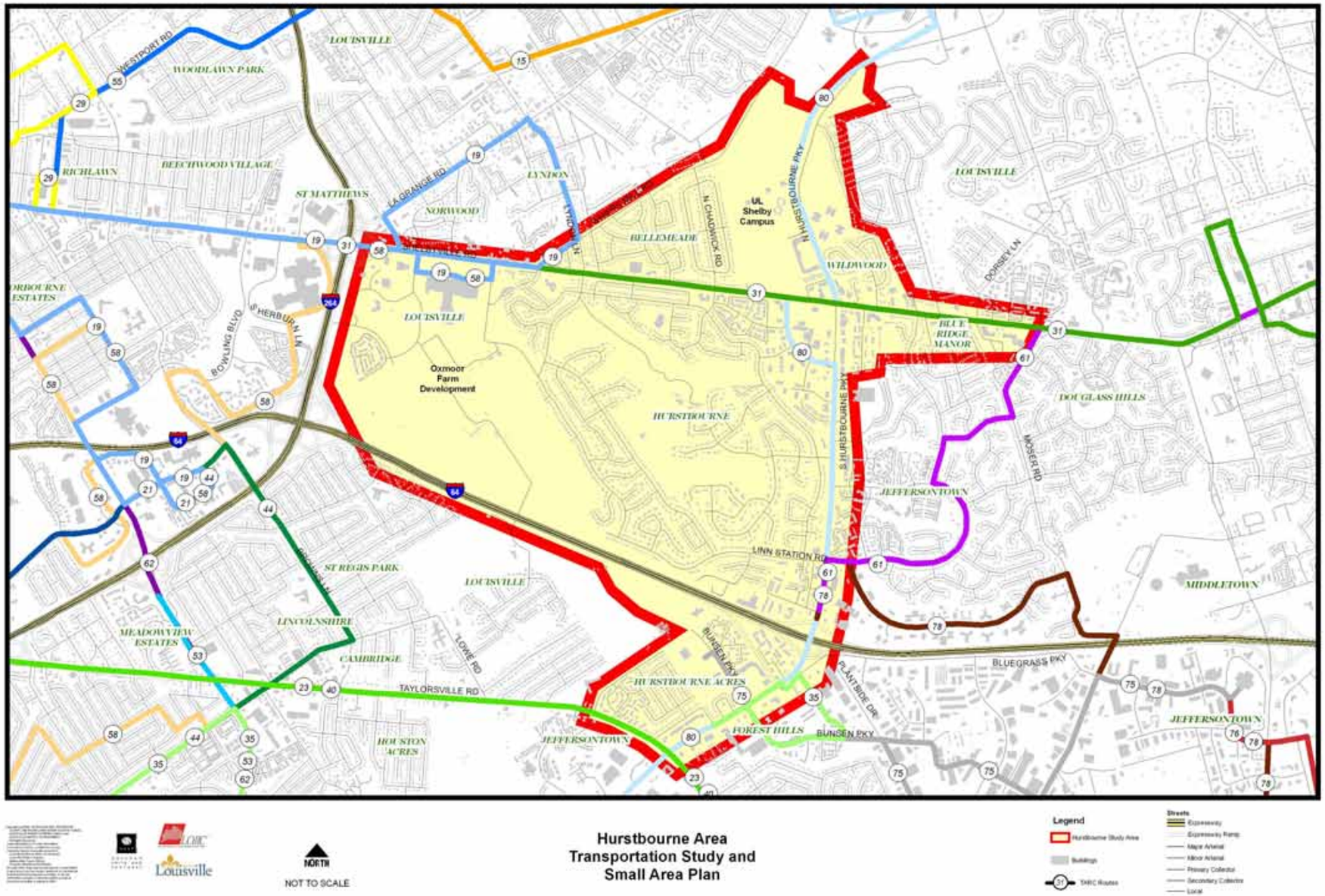

Hurstbourne Area
Transportation Study and
Small Area Plan

FIGURE 5: Tube Count Locations

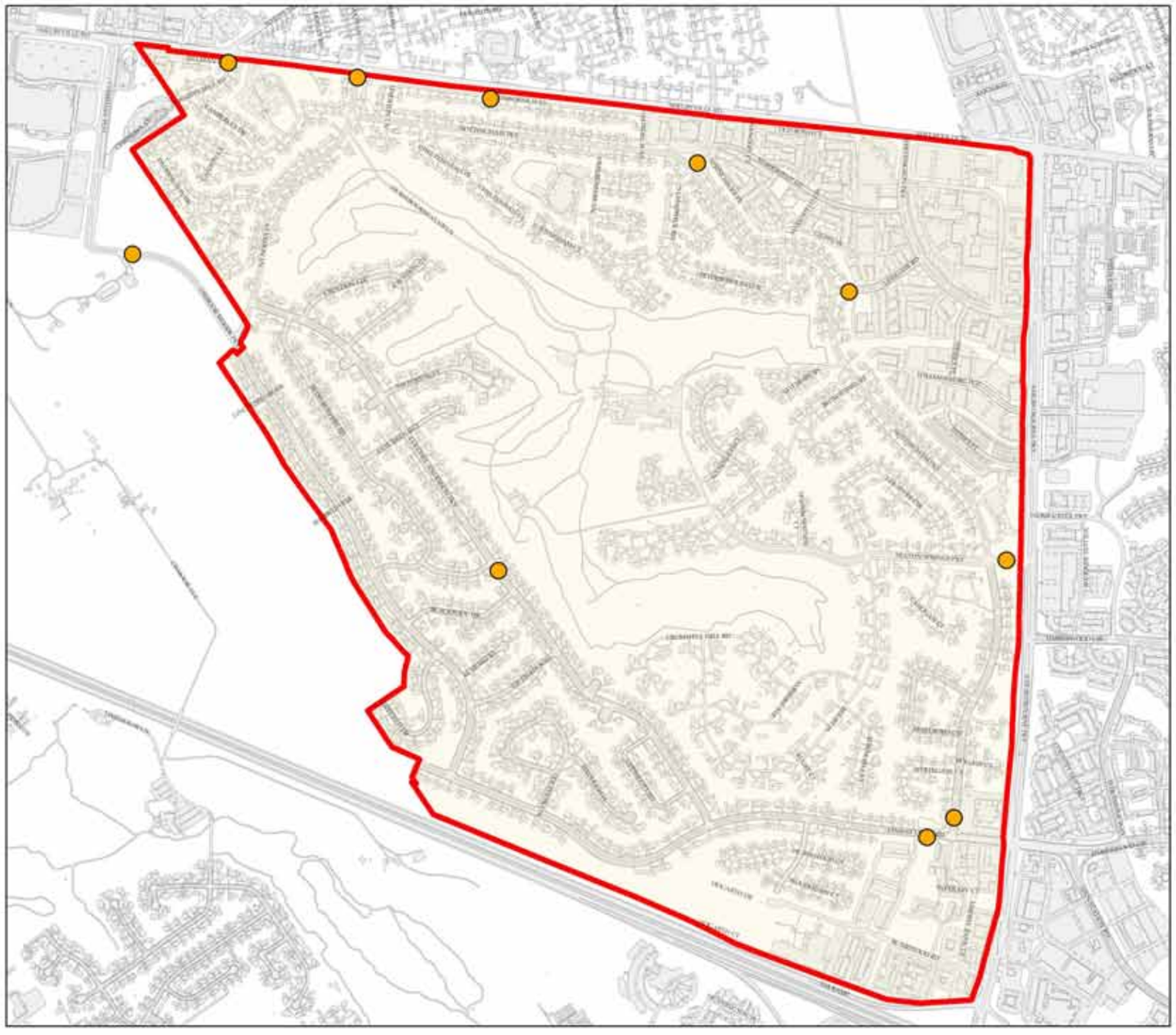

Legend

- Tube Count Location
- City of Hurstbourne Limits
- Road, Building, Pavement

N

Copyright (c) 2006, LOUISVILLE AND JEFFERSON COUNTY METROPOLITAN SEWER DISTRICT (MSD), LOUISVILLE WATER COMPANY (LWC), LOUISVILLE METRO GOVERNMENT, and JEFFERSON COUNTY PROPERTY VALUATION ADMINISTRATOR (PVA). All Rights Reserved.

3.0 FUTURE CONDITIONS

The future traffic concerns in the study area include increases in cut-through traffic, noise and air pollution resulting from the development of Oxmoor Farm and the University of Louisville Shelby Campus.

Planned Development Projects

KIPDA's baseline model reflects Jefferson County (or Louisville Metro) growth based on employment data generated by Louisville Metro Planning and Design Services. This baseline socioeconomic data does not specifically take into account the most recent development plans for Oxmoor Farm and the UofL Shelby Campus. To determine the impacts of these developments on the traffic generation in the baseline model, the socioeconomic data were revised to reflect the planned developments of Oxmoor Farm and UofL Shelby Campus. Revised employment numbers based on the current plans of these developments were generated by Gresham, Smith and Partners and approved by Louisville Metro Planning and Design Services. In general, the changes in the model results were insignificant. These results are justified based on the change in the type of employment planned for the area versus the type of employment in the baseline model. The baseline model projected more retail employment in the area, whereas the current development plans are more office based employment. Although the employment numbers are higher, office employment will generate substantially fewer trips than retail employment. Therefore, the traffic analysis considers appropriate development information available for the study area.

The traffic impact study for the University of Louisville Shelby Campus development dated November 1, 2004 does not reflect the current plans for the development and should be updated.

A major concern with several Study Advisory Committee members, as well as residents of the City of Hurstbourne, is the amount of traffic generated by the proposed Oxmoor Farm development that is anticipated to cut through the City of Hurstbourne. This section of the report addresses that issue. It should be noted that the Oxmoor Farm Conceptual Master Plan (shown in **Figure 3**) and its associated zoning have been approved by the appropriate governing authorities. The Traffic Impact and Air Quality Analysis for the Oxmoor Farm Rezoning (traffic impact study), dated February 2002, is an accurate report of the projected traffic conditions. The assumptions made for the study were also approved by the appropriate governing authorities. The study followed standard practices in presenting the anticipated roadway conditions and does not state opinions on the capacity of the area to accommodate the increased traffic.

It should be noted that prediction of the amount of cut-through traffic is difficult to make, as it is based on a number of assumptions and engineering judgments including trip assignments, distributions, driver behavior, contitions on area streets, desire flow and zones of influence among others. It is acknowledged there is room for variation and differences in opinion in this type analysis. This analysis is based on the assumptions and judgments of future land uses, trip generation, and trip distribution in the traffic impact study.

Phase 1 of the Oxmoor Farm Development is not planned to have any new street connections with the City of Hurstbourne streets. Phase 2 is planned to will include a connection from Bowling Boulevard over I-264 to the center of the development and a realignment of Christian Way to intersect with the an extension of Lyndon Lane south of the existing intersection with Oxmoor Woods Parkway. Phase 3 will complete the development and anticipates completing the extension of Bunsen Parkway over I-64 to the existing Bunsen Parkway, and an extension of Christian Way to intersect with the Bunsen Parkway extension.

The estimated external Average Daily Trips (ADT), AM Peak Hour (AM Pk Hr) trips and PM Peak Hour (PM Pk Hr) trips generated by the development as reported in the traffic impact study are shown in **Table 6**.

TABLE 6: Oxmoor Farm External Trip Generation

	ADT	AM Pk Hr		PM Pk Hr	
		Entering	Exiting	Entering	Exiting
Phase 1	2,122	12	7	49	54
Phase 1,2	19,709	1,565	515	710	1,617
Phase 1,2,3	38,132	2,938	1,149	1,488	3,002

The concern about additional cut-through traffic from the Oxmoor Farm Development should be approached independently of the existing cut-through traffic concerns because they are in fact independent. Observations indicate that the existing cut-through traffic is predominantly southeast to/from northwest. Traffic from the proposed development is only expected to be drawn through the City of Hurstbourne if its origin or destination is northeast of the development when Bunsen Parkway is completed. Traffic originating from or destined to the southeast, southwest, and northwest is more likely to use Bunsen Parkway, Oxmoor Lane, or Christian Way at full build-out. As a result, the most significant increases in traffic from the proposed development are expected to be on Lyndon Lane and Linn Station Road. The proposed development is not likely to increase the traffic on Oxmoor Woods Parkway, Colonel Anderson Parkway or Nottingham Parkway significantly.

Based on the trip distribution in the traffic impact study, traffic generated to/from the development, that can be expected to use Lyndon Lane or Linn Station Road includes:

- Northbound Christian Way Right turning traffic (NB Rt) to Shelbyville Road
- Westbound Shelbyville Road Left turning traffic (WB Lt) to Christian Way
- Eastbound Bunsen Parkway Left turning traffic (EB Lt) to Hurstbourne Parkway
- Southbound Hurstbourne Parkway Right turning traffic (SB Rt) to Bunsen Parkway

Table 7 shows traffic volumes generated by Oxmoor Farm (project-generated traffic) for those movements, and **Table 8** shows the respective percentages of the total project-generated traffic.

TABLE 7: Oxmoor Farm External Trip Distribution

AM Pk Hr	Christian Way		Bunsen		Combined	
	WB Lt	NB Rt	SB Rt	EB Lt	Entering	Exiting
Phase 1,2	385	113	NA	NA	385	113
Phase 1,2,3	200	65	293	95	493	160
PM Pk Hr	Christian Way		Bunsen		Combined	
	WB Lt	NB Rt	SB Rt	EB Lt	SB Rt	EB Lt
Phase 1,2	196	430	NA	NA	196	430
Phase 1,2,3	119	222	173	325	292	547

TABLE 8: Oxmoor Farm External Trip Distribution %

AM Pk Hr	Christian Way		Bunsen		Combined	
	WB Lt	NB Rt	SB Rt	EB Lt	Entering	Exiting
Phase 1,2	25%	22%	NA	NA	25%	22%
Phase 1,2,3	7%	6%	10%	8%	17%	14%
PM Pk Hr	Christian Way		Bunsen		Combined	
	WB Lt	NB Rt	SB Rt	EB Lt	SB Rt	EB Lt
Phase 1,2	28%	27%	NA	NA	28%	27%
Phase 1,2,3	8%	7%	12%	11%	20%	18%

Proportionally, more of the project-generated traffic is expected to use Christian Way with Phase 2 than with Phase 3; this is because the southeast connection Bunsen Parkway extension will provide is not built until Phase 3. The lack of this southeast connection will certainly increase the proportion of traffic that uses Lyndon Lane or Linn Station Road. Averaging the combined percentages of entering and exiting trips shown in **Table 8**, it can be seen that up to 28% or 19% of the site generated traffic is destined to/from areas northeast of the site after phases 2 and 3 respectively. Realistically, most of this traffic will continue to use the arterials without using Lyndon Lane or Linn Station Road. Therefore, only a portion of this traffic can be expected to cut-thru the City of Hurstbourne.

The traffic impact study states that, "… on a typical weekday, approximately 1-2% of the project-generated traffic may use Lyndon Lane." Connections with Lincolnshire Drive, Stamford Drive, Cheffield Drive, and Linn Station Road are not included in the traffic impact study. Those streets can be accessed from Lyndon Lane via Oxmoor Woods Parkway. The approved plan for the development includes connections with Lincolnshire Drive, Stamford Drive, Cheffield Drive, and Linn Station Road via an extension of Linn Station Road which parallels Oxmoor Woods Parkway and intersects with the extension of Lyndon Lane. It is assumed that the 1-2% stated in the traffic impact study would include all of the traffic accessing Shelbyville Road or Hurstbourne Parkway through the City of Hurstbourne including the use of Linn Station Road. Using 2% of the total project-generated traffic as stated in the traffic impact study, the volumes that are expected to/from the Oxmoor Farm development through the City of Hurstbourne are shown in **Table 9**. While 2% of the project-generated traffic seems low, it is important to note that this actually represents up to 8% or 13% of the traffic expected to/from areas northeast of the site after phases 2 and 3 respectively.

TABLE 9: Total Cut-through

	ADT	AM Pk Hr		PM Pk Hr	
		Entering	Exiting	Entering	Exiting
Phase 1,2	394	31	10	14	32
Phase 1,2,3	763	59	23	30	60

Table 10 shows the volumes in **Table 9** with a 37% / 63% split on Lyndon Lane and Linn Station Road respectively.

TABLE 10: Cut-through by Street

ADT	Lyndon		Linn Station	
	Entering	Exiting	Entering	Exiting
Phase 1,2	73	73	124	124
Phase 1,2,3	141	141	240	240
AM Pk Hr	Lyndon		Linn Station	
	Entering	Exiting	Entering	Exiting
Phase 1,2	12	4	20	6
Phase 1,2,3	22	9	37	14
PM Pk Hr	Lyndon		Linn Station	
	Entering	Exiting	Entering	Exiting
Phase 1,2	5	12	9	20
Phase 1,2,3	11	22	19	38

Table 11 shows the expected impact from the Oxmoor Farm development on the traffic volumes on Lyndon Lane south of Shelbyville Road and on Linn Station Road west of Nottingham Parkway. The existing volumes are approximated from the automatic tube counts located in **Appendix B**.

TABLE 11: Cut-through Summary

		Existing	Phases 1,2			Phases 1,2,3		
			Cut-through	Future	% Increase	Cut-thru	Future	% Increase
Lyndon Lane	ADT	4,430	146	4,576	3%	282	4,712	6%
	AM Pk Hr	527	23	550	4%	43	570	8%
	PM Pk Hr	480	11	491	2%	22	502	5%
Linn Station Road	ADT	5,130	248	5,378	5%	480	5,610	9%
	AM Pk Hr	270	39	309	15%	74	344	27%
	PM Pk Hr	615	18	633	3%	37	652	6%

The expected volumes shown in **Table 11** do not exceed the traffic capacity of these streets; therefore this concern becomes a quality of life issue based on what is appropriate for this local roadway classification. It should be noted that the above analysis assumes no changes in the City of Hurstbourne street network or connections to the Oxmoor Farm Development. This analysis is based on the assumptions and judgments of the initial traffic impact study and therefore, does consider the planned and recommended roadway improvements that were included in that study. The implementation of a traffic management plan on the local streets in the City of Hurstbourne or additional changes in the exterior street network could change these cut-through traffic volumes.

Planned Roadway Improvements

Several roadway improvements are planned in and around the study area. The roadway improvements are shown KIPDA's 2030 Horizon Plan and some of them are listed in the KYTC's Six Year Plan. The planned improvements and the years for which they are planned are listed in

Table 12. These planned improvements are reflected in KIPDA's baseline travel demand model for the analysis years which are also shown in **Table 12**. The 2030 baseline KIPDA model does not include any further roadway improvements than the 2020 model.

It should be noted that the extension of Bunsen Boulevard was removed from the KYTC's Six Year Plan in legislative session at the end of May 2006. Due to the benefits of this connection, it is still recommended and assumed to be constructed in 2012 as modeled in KIPDA's traffic demand model.

It should also be noted that a lane was added to I-64 eastbound connecting the auxiliary lane from I-264 eastbound to the auxiliary lane to Hurstbourne Parkway. This lane was added with striping and shoulder improvements through the Oxmoor farm underpass in the summer of 2006.

TABLE 12: Planned Roadway Improvements

Improvement	KIPDA Baseline Model	KIPDA 2030 Horizon Plan	KYTC Six Year Plan '06-'12
Signal System Improvement US 60 Lexington Road to 8-Mile Center	2009	2005	
Widening Westport Road 2 lanes to 5 lanes	2009	2006	2006
Dual left EB US 60 @ Hurstbourne Parkway	2009	2006	2007
Westport / I-264 Interchange	2009	2007	2009
Additional lane on ramp from I-64 WB to I-264 WB	2009	2008	2008
Hurstbourne Parkway / US 60 Intersection Improvements	2012	2010	2007
Bunsen Boulevard from Christian Way to Bowling Boulevard	2012	2010	
Additional lane SB Hurstbourne Parkway from Shelbyville Road to Linn Station Road	2012	2011	2007
I-64 / Hurstbourne Parkway Interchange	2012	2012	2010
Bunsen Boulevard from Hurstbourne Parkway to Christian Way	2012	2012	
Additional lanes both directions on US 60 from I-264 to Hurstbourne Parkway	2020	2013	
Additional lanes both directions on US 60 from Hurstbourne Parkway to I-265	2020	2015	
Additional lane both directions on Taylorsville Road from Hikes Lane to Hurstbourne Parkway	2020	2016	
Additional lane both directions on I-64 from I-264 to Hurstbourne Parkway	2020	2020	
I-264 / Brownsboro Road Interchange Design Study	2020	2020	2008

Projected Volumes

Projected traffic volumes were provided by KIPDA based on its traffic demand model; the model accounts for changes in traffic patterns due to the implementation of planned roadway improvement projects and also accounts for regional growth and development. The projected traffic volumes for 2009, 2012, 2020, and 2030 are shown in **Appendix C**.

Traffic Operations and Intersection Levels of Service

HCS+ is not capable of analyzing more than two through lanes in any direction at an unsignalized intersection. Therefore, the levels of service for the unsignalized intersections of Whipps Mill Road and Blue Ridge Road on Shelbyville Road are based on Shelbyville Road having only two through lanes in each direction as opposed to the six lanes that are assumed in KIPDA's travel demand model.

The levels of service at the analyzed intersections are shown in **Tables 13, 14, 15, and 16** for 2009, 2012, 2020, and 2030 respectively and the HCS+ output are in **Appendix D**.

TABLE 13: 2009 Level of Service

	Time	Street Names		Eastbound			Westbound			Northbound			Southbound			Approach				Overall
				L	T	R	L	T	R	L	T	R	L	T	R	Eb.	Wb.	Nb.	Sb.	
2009	A.M.	Linn Station	Hurstbourne Pky	E	F	F	F	E	E	D	D	D	F	E	**	F	F	D	F	F
	P.M.	Linn Station	Hurstbourne Pky	E	F	F	F	E	D	F	F	D	F	F	**	F	F	F	F	F
	A.M.	8 Mile Center	Shelbyville Rd	D	B	**	D	B	A	**	D	**	D	D	**	B	B	D	D	B
	P.M.	8 Mile Center	Shelbyville Rd	E	B	**	E	B	A	**	E	**	F	F	**	B	B	E	F	B
	A.M.	Christian Way	Shelbyville Rd	A	B	A	D	A	**	F	D	D	**	D	**	B	A	F	D	B
	P.M.	Christian Way	Shelbyville Rd	A	D	B	F	B	**	F	E	E	**	E	**	D	D	F	E	D
	A.M.	Dorsey Ln	Shelbyville Rd	C	A	A	B	C	**	C	C	**	F	C	D	B	C	C	E	C
	P.M.	Dorsey Ln	Shelbyville Rd	D	A	A	C	D	**	D	D	**	F	D	D	B	D	D	F	E
	A.M.	Shelbyville Rd	Hurstbourne Pky	F	D	D	F	F	**	F	F	D	F	E	E	E	F	F	F	F
	P.M.	Shelbyville Rd	Hurstbourne Pky	F	F	D	F	F	**	F	F	D	F	E	D	F	F	F	F	F
	A.M.	Lyndon Ln	Shelbyville Rd	E	C	**	D	C	A	F	D	**	**	F	**	C	C	E	F	D
	P.M.	Lyndon Ln	Shelbyville Rd	F	C	**	E	C	B	E	D	**	**	F	**	D	C	E	F	D
	A.M.	Whittington	Shelbyville Rd	A	A	A	B	A	A	C	C	**	C	C	C	A	A	C	C	A
	P.M.	Whittington	Shelbyville Rd	C	F	C	C	C	B	E	C	**	C	C	C	F	C	E	C	E
	A.M.	Taylorsville Rd	Hurstbourne Pky	F	D	D	E	E	F	F	F	D	F	D	D	F	F	F	F	F
	P.M.	Taylorsville Rd	Hurstbourne Pky	F	F	E	F	F	E	D	E	D	F	F	F	F	F	E	F	F
	A.M.	Westport Rd	Hurstbourne Pky	D	D	D	F	D	C	D	C	C	D	D	C	D	E	C	D	D
	P.M.	Westport Rd	Hurstbourne Pky	E	E	D	F	D	C	F	D	F	E	D	D	E	E	F	D	E
	A.M.	Whittington	Hurstbourne Pky	**	F	F	**	F	E	E	B	**	E	C	B	F	F	C	C	C
	P.M.	Whittington	Hurstbourne Pky	**	F	E	**	E	D	F	C	**	F	D	C	F	E	C	D	D
	A.M.	Whippsmill Rd	Shelbyville Rd	F	**	**	B	**	**	**	X	**	X	**	E	**	**	X	X	**
	P.M.	Whippsmill Rd	Shelbyville Rd	X	**	**	B	**	**	**	X	**	X	**	X	**	**	X	X	**
	A.M.	Blue Ridge	Shelbyville Rd	B	**	**	A	**	**	B	**	A	**	**	**	**	**	B	**	**
	P.M.	Blue Ridge	Shelbyville Rd	A	**	**	B	**	**	D	**	B	**	**	**	**	**	C	**	**
	A.M.	Tamarisk	Hurstbourne Pky	**	D	**	C	**	A	B	**	**	A	**	**	D	C	**	**	**
	P.M.	Tamarisk	Hurstbourne Pky	**	C	**	C	**	A	B	**	**	A	**	**	C	C	**	**	**

** Indicates that the data is not applicable because a dedicated lane does not exist for that movement or that the data is not available for the uncontrolled movements at the unsignalized intersections
X Indicates that the delay exceeds the capacity of the software

TABLE 14: 2012 Level of Service

	Time	Street Names		Eastbound			Westbound			Northbound			Southbound			Approach				Overall
				L	T	R	L	T	R	L	T	R	L	T	R	Eb.	Wb.	Nb.	Sb.	
2012	A.M.	Linn Station	Hurstbourne Pky	E	F	F	F	E	E	E	C	E	F	D	D	**F**	**F**	**D**	**E**	**F**
	P.M.	Linn Station	Hurstbourne Pky	E	F	F	F	E	D	F	D	D	F	F	D	**F**	**F**	**E**	**F**	**F**
	A.M.	8 Mile Center	Shelbyville Rd	D	B	**	D	B	A	**	D	**	D	D	**	**B**	**B**	**D**	**D**	**B**
	P.M.	8 Mile Center	Shelbyville Rd	E	A	**	E	B	A	**	E	**	F	F	**	**A**	**B**	**E**	**F**	**B**
	A.M.	Christian Way	Shelbyville Rd	A	C	A	E	A	**	F	D	D	**	D	**	**C**	**A**	**F**	**D**	**B**
	P.M.	Christian Way	Shelbyville Rd	A	D	A	F	B	**	F	E	E	**	E	**	**D**	**D**	**F**	**E**	**E**
	A.M.	Dorsey Ln	Shelbyville Rd	C	A	A	B	C	**	C	C	**	F	C	E	**B**	**C**	**C**	**F**	**D**
	P.M.	Dorsey Ln	Shelbyville Rd	E	A	A	C	D	**	D	D	**	F	D	D	**C**	**D**	**D**	**F**	**E**
	A.M.	Shelbyville Rd	Hurstbourne Pky	F	D	D	F	F	**	F	F	D	F	E	E	**E**	**F**	**F**	**E**	**F**
	P.M.	Shelbyville Rd	Hurstbourne Pky	F	F	D	F	F	**	F	F	D	F	E	D	**F**	**F**	**F**	**E**	**F**
	A.M.	Lyndon Ln	Shelbyville Rd	F	D	**	D	C	A	F	D	**	**	F	**	**D**	**C**	**F**	**F**	**E**
	P.M.	Lyndon Ln	Shelbyville Rd	F	E	**	E	D	B	E	D	**	**	F	**	**E**	**D**	**E**	**F**	**E**
	A.M.	Whittington	Shelbyville Rd	A	A	A	B	A	A	C	C	**	C	C	C	**A**	**A**	**C**	**C**	**A**
	P.M.	Whittington	Shelbyville Rd	C	F	C	C	D	B	E	C	**	C	C	C	**F**	**C**	**E**	**C**	**F**
	A.M.	Taylorsville Rd	Hurstbourne Pky	F	D	D	E	F	F	F	F	D	F	D	D	**F**	**F**	**F**	**F**	**F**
	P.M.	Taylorsville Rd	Hurstbourne Pky	F	F	E	F	F	F	D	F	D	F	F	F	**F**	**F**	**F**	**F**	**F**
	A.M.	Westport Rd	Hurstbourne Pky	D	D	D	F	D	C	D	C	C	D	D	C	**D**	**F**	**C**	**D**	**E**
	P.M.	Westport Rd	Hurstbourne Pky	E	E	D	F	D	C	F	D	F	E	D	D	**E**	**E**	**F**	**E**	**E**
	A.M.	Whittington	Hurstbourne Pky	**	E	E	**	E	E	E	A	**	F	B	B	**E**	**E**	**B**	**B**	**B**
	P.M.	Whittington	Hurstbourne Pky	**	E	E	**	D	D	F	C	**	F	D	C	**E**	**D**	**D**	**D**	**D**
	A.M.	Whippsmill Rd	Shelbyville Rd	F	**	**	C	**	**	**	X	**	X	**	F	**	**	**X**	**X**	**
	P.M.	Whippsmill Rd	Shelbyville Rd	F	**	**	X	**	**	**	X	**	X	**	D	**	**	**X**	**X**	**
	A.M.	Blue Ridge	Shelbyville Rd	B	**	**	A	**	**	B	**	A	**	**	**	**	**	**B**	**	**
	P.M.	Blue Ridge	Shelbyville Rd	B	**	**	C	**	**	E	**	C	**	**	**	**	**	**C**	**	**
	A.M.	Tamarisk	Hurstbourne Pky	**	D	**	C	**	A	B	**	**	A	**	**	**D**	**C**	**	**	**
	P.M.	Tamarisk	Hurstbourne Pky	**	C	**	D	**	A	B	**	**	B	**	**	**C**	**C**	**	**	**

** Indicates that the data is not applicable because a dedicated lane does not exist for that movement or that the data is not available for the uncontrolled movements at the unsignalized intersections
X Indicates that the delay exceeds the capacity of the software

TABLE 15: 2020 Level of Service

	Time	Street Names		Eastbound			Westbound			Northbound			Southbound			Approach				Overall
				L	T	R	L	T	R	L	T	R	L	T	R	Eb.	Wb.	Nb.	Sb.	
2020	A.M.	Linn Station	Hurstbourne Pky	E	F	F	F	E	E	E	C	F	F	D	D	**F**	**F**	**E**	**E**	**F**
	P.M.	Linn Station	Hurstbourne Pky	E	F	F	F	E	D	F	D	D	F	F	D	**F**	**F**	**E**	**F**	**F**
	A.M.	8 Mile Center	Shelbyville Rd	D	A	**	D	A	A	**	D	**	D	D	**	**A**	**A**	**D**	**D**	**A**
	P.M.	8 Mile Center	Shelbyville Rd	E	A	**	E	A	A	**	E	**	F	F	**	**A**	**A**	**E**	**F**	**A**
	A.M.	Christian Way	Shelbyville Rd	A	B	A	E	A	**	E	D	D	**	D	**	**B**	**A**	**E**	**D**	**B**
	P.M.	Christian Way	Shelbyville Rd	A	C	B	F	B	**	F	E	E	**	E	**	**C**	**D**	**F**	**E**	**D**
	A.M.	Dorsey Ln	Shelbyville Rd	B	A	A	B	C	**	C	C	**	F	C	C	**B**	**C**	**C**	**E**	**C**
	P.M.	Dorsey Ln	Shelbyville Rd	D	A	A	C	D	**	D	D	**	F	D	D	**B**	**D**	**D**	**F**	**D**
	A.M.	Shelbyville Rd	Hurstbourne Pky	F	D	D	F	E	**	F	F	D	F	E	E	**E**	**E**	**F**	**E**	**E**
	P.M.	Shelbyville Rd	Hurstbourne Pky	F	F	E	F	F	**	F	F	D	F	E	D	**F**	**F**	**F**	**E**	**F**
	A.M.	Lyndon Ln	Shelbyville Rd	F	C	**	D	B	A	F	D	**	**	F	**	**C**	**B**	**F**	**F**	**E**
	P.M.	Lyndon Ln	Shelbyville Rd	F	D	**	E	C	B	E	D	**	**	F	**	**D**	**C**	**D**	**F**	**E**
	A.M.	Whittington	Shelbyville Rd	C	B	B	A	C	B	D	D	**	D	D	D	**C**	**C**	**D**	**D**	**C**
	P.M.	Whittington	Shelbyville Rd	C	C	B	C	C	B	D	C	**	C	C	C	**C**	**C**	**D**	**C**	**C**
	A.M.	Taylorsville Rd	Hurstbourne Pky	F	D	D	E	E	F	F	F	D	F	D	D	**F**	**F**	**F**	**F**	**F**
	P.M.	Taylorsville Rd	Hurstbourne Pky	F	F	E	F	F	F	E	D	D	F	F	F	**F**	**F**	**D**	**F**	**F**
	A.M.	Westport Rd	Hurstbourne Pky	D	D	D	F	D	C	E	C	C	D	D	C	**D**	**F**	**D**	**D**	**E**
	P.M.	Westport Rd	Hurstbourne Pky	E	E	D	F	D	C	F	D	F	E	E	D	**E**	**E**	**F**	**E**	**F**
	A.M.	Whittington	Hurstbourne Pky	**	E	F	**	E	E	F	B	**	F	B	B	**E**	**E**	**C**	**B**	**C**
	P.M.	Whittington	Hurstbourne Pky	**	E	E	**	D	D	F	D	**	F	D	C	**E**	**D**	**D**	**D**	**D**
	A.M.	Whippsmill Rd	Shelbyville Rd	F	**	**	X	**	**	**	X	**	X	**	F	**	**	**X**	**X**	**
	P.M.	Whippsmill Rd	Shelbyville Rd	X	**	**	X	**	**	**	X	**	X	**	X	**	**	**X**	**X**	**
	A.M.	Blue Ridge	Shelbyville Rd	B	**	**	A	**	**	C	**	B	**	**	**	**	**	**C**	**	**
	P.M.	Blue Ridge	Shelbyville Rd	X	**	**	B	**	**	X	**	A	**	**	**	**	**	**X**	**	**
	A.M.	Tamarisk	Hurstbourne Pky	**	E	**	D	**	A	B	**	**	A	**	**	**E**	**C**	**	**	**
	P.M.	Tamarisk	Hurstbourne Pky	**	X	**	X	**	X	X	**	**	B	**	**	**X**	**X**	**	**	**

** Indicates that the data is not applicable because a dedicated lane does not exist for that movement or that the data is not available for the uncontrolled movements at the unsignalized intersections
X Indicates that the delay exceeds the capacity of the software
Indicates that the levels of service for the unsignalized intersections of Whipps Mill Road and Blue Ridge Road are based on Shelbyville Road having only two through lanes in each direction as for the analysis years of 2020 and 2030

TABLE 16: 2030 Level of Service

	TIME	Street Names		Eastbound			Westbound			Northbound			Southbound			Approach				Overall
				L	T	R	L	T	R	L	T	R	L	T	R	Eb.	Wb.	Nb.	Sb.	
2030	A.M.	Linn Station	Hurstbourne Pky	F	F	F	F	E	E	E	C	F	F	D	D	**F**	**F**	**E**	**E**	**F**
	P.M.	Linn Station	Hurstbourne Pky	F	F	F	F	E	D	F	D	D	F	F	D	**F**	**F**	**F**	**F**	**F**
	A.M.	8 Mile Center	Shelbyville Rd	D	A	**	D	B	A	**	D	**	D	D	**	**A**	**B**	**D**	**D**	**A**
	P.M.	8 Mile Center	Shelbyville Rd	E	A	**	E	A	A	**	E	**	F	F	**	**A**	**A**	**E**	**F**	**A**
	A.M.	Christian Way	Shelbyville Rd	A	B	A	E	A	**	F	D	D	**	D	**	**B**	**A**	**F**	**D**	**B**
	P.M.	Christian Way	Shelbyville Rd	A	D	B	F	B	**	F	E	E	**	E	**	**D**	**C**	**F**	**E**	**E**
	A.M.	Dorsey Ln	Shelbyville Rd	C	A	A	B	C	**	C	C	**	F	C	D	**B**	**C**	**C**	**F**	**D**
	P.M.	Dorsey Ln	Shelbyville Rd	E	A	A	C	D	**	D	D	**	F	D	D	**B**	**D**	**D**	**F**	**E**
	A.M.	Shelbyville Rd	Hurstbourne Pky	E	E	D	E	F	**	F	F	D	F	F	E	**E**	**F**	**F**	**F**	**F**
	P.M.	Shelbyville Rd	Hurstbourne Pky	F	F	E	F	F	**	F	F	D	F	E	D	**F**	**F**	**F**	**F**	**F**
	A.M.	Lyndon Ln	Shelbyville Rd	F	F	**	E	D	A	F	D	**	**	F	**	**F**	**D**	**F**	**F**	**F**
	P.M.	Lyndon Ln	Shelbyville Rd	F	F	**	E	E	B	F	D	**	**	F	**	**F**	**D**	**F**	**F**	**F**
	A.M.	Whittington	Shelbyville Rd	C	B	B	A	C	B	D	D	**	D	D	D	**C**	**C**	**D**	**D**	**C**
	P.M.	Whittington	Shelbyville Rd	C	C	C	C	C	B	D	C	**	C	C	D	**C**	**C**	**D**	**C**	**C**
	A.M.	Taylorsville Rd	Hurstbourne Pky	F	D	D	E	E	F	F	F	D	F	D	D	**F**	**F**	**F**	**F**	**F**
	P.M.	Taylorsville Rd	Hurstbourne Pky	F	F	E	F	F	F	E	E	D	F	F	F	**F**	**F**	**E**	**F**	**F**
	A.M.	Westport Rd	Hurstbourne Pky	D	D	D	F	D	C	E	C	C	D	D	C	**D**	**F**	**D**	**D**	**E**
	P.M.	Westport Rd	Hurstbourne Pky	F	E	D	F	D	C	F	E	F	F	E	D	**E**	**E**	**F**	**E**	**F**
	A.M.	Whittington	Hurstbourne Pky	**	E	F	**	E	E	E	B	**	F	C	B	**E**	**E**	**C**	**C**	**C**
	P.M.	Whittington	Hurstbourne Pky	**	E	F	**	D	D	F	C	**	F	C	C	**E**	**D**	**D**	**C**	**D**
	A.M.	Whippsmill Rd	Shelbyville Rd	F	**	**	F	**	**	**	X	**	X	**	F	**	**	**X**	**X**	**
	P.M.	Whippsmill Rd	Shelbyville Rd	F	**	**	D	**	**	**	X	**	X	**	F	**	**	**X**	**X**	**
	A.M.	Blue Ridge	Shelbyville Rd	X	**	**	A	**	**	X	**	A	**	**	**	**	**	**X**	**	**
	P.M.	Blue Ridge	Shelbyville Rd	X	**	**	C	**	**	X	**	A	**	**	**	**	**	**X**	**	**
	A.M.	Tamarisk	Hurstbourne Pky	**	E	**	C	**	B	B	**	**	A	**	**	**E**	**C**	**	**	**
	P.M.	Tamarisk	Hurstbourne Pky	**	X	**	X	**	X	X	**	**	B	**	**	**X**	**X**	**	**	**

** Indicates that the data is not applicable because a dedicated lane does not exist for that movement or that the data is not available for the uncontrolled movements at the unsignalized intersections

X Indicates that the delay exceeds the capacity of the software

Indicates that the levels of service for the unsignalized intersections of Whipps Mill Road and Blue Ridge Road are based on Shelbyville Road having only two through lanes in each direction as for the analysis years of 2020 and 2030

4.0 POSSIBLE IMPROVEMENTS

There are three approaches to improving the mobility concerns in the study area. The first approach is reducing congestion by finding ways to reduce the demand; this means fewer vehicles on the road at any given time. The second approach is finding ways to manage the traffic congestion better by optimizing traffic flow on the arterials and controlling traffic speeds and patterns on the local streets. The third approach is increasing capacity with infrastructure improvements. The possible improvements included in this study range from small and specific ideas that fix a particular problem impacting a small area to large and conceptual ideas that improve mobility throughout the study area. Possible improvements considered are presented geographically.

Area Wide

These possible improvements are not focused on any one particular location. They are mostly related to policies, programs, and initiatives that impact large portions of the study area. With the costs of providing new transportation facilities and systems on the rise, federal, state, and local governments are constantly looking for ways to more effectively use their existing and future transportation systems. Two of the tools frequently employed by these agencies in an effort to reduce travel demand and improve the efficiency of their existing transportation systems are transportation demand management (TDM) and transportation systems management (TSM).

TDM addresses traffic congestion by reducing travel demand rather than increasing transportation capacity, and focuses on alternatives such as ride sharing, flextime, increased transit usage, walking, and bicycling. TSM strategies focus on increasing the efficiency, safety, and capacity of existing transportation systems through such techniques as relatively minor roadway improvements, access management programs, high occupancy vehicle (HOV) lanes, incident response plans, targeted traffic enforcement and intelligent transportation systems (ITS).

Transportation Demand Management Program (TDM)

Alternative work arrangements such as variable work hours, alternative work schedules, and telecommuting or work-at-home options are benefits that employers can provide to their employees while possibly saving on overhead costs. Employers can also offer incentives and disincentives to encourage transit usage and ridesharing. Parties that should be included in this program are Louisville Jefferson County Metro, KIPDA, Greater Louisville Inc., Jeffersontown Chamber of Commerce and businesses in the Jeffersontown Industrial Park, Oxmoor Farm Trustees and future businesses in the Oxmoor Farm development, University of Louisville and future businesses in the Shelby Campus Development.

Alternatives to the single occupant vehicle have been referred to as multi-modal solutions and require expanding the role of other forms of transportation. These multi-modal possibilities include:

- Transit alternatives
- Carpooling
- Van pooling
- Improved Pedestrian Facilities
- Improved Bicycle facilities
- Improved site development design to better accommodate pedestrian and bicycle transportation

Mass Transit

Mass transit is a solution for moving large amounts of people without needing to expand a roadway and it can be focused on carrying people to regional destinations during peak hours. TARC already offers routes along the arterial corridors and a number of other routes that travel along collector roads. Therefore, some infrastructure, like TARC stops, currently exist but lack amenities such as benches, shelters or connecting sidewalks. In order for transit to better serve the area, a greater emphasis is needed to connect people to the transit routes; this could include a parking lot so motorists can use a bus for the rest of their trip, bike lanes so bicyclists can board buses with their bikes on the bus' bike rack, or sidewalks for pedestrians walking to the bus stop. Suburban areas such as the study area can be well served with park-and-ride lots coordinated with express routes that use expressways or make limited stops.

Due to the regional nature of the land uses and major arterial roadways, bus pull off lanes and or transit centers may be appropriate. The pull off lanes would allow the buses to have space to drop off and pick up passengers while allowing the free flow of traffic. A transit center could potentially handle a larger crowd of passengers while providing features such as shelters, seating, newspaper corrals/kiosks and trash receptacles. Some locations may include the intersections of Hurstbourne Parkway at Shelbyville Road, I-64, and Taylorsville Road and Shelbyville Road at I-264.

One potential option is a circulator route serving the commercial destinations along Shelbyville Road and Hurstbourne Parkway. The route could travel back and forth on the arterial roads or in the future use Bunsen Parkway to create a loop. This loop could be expanded to include Hikes Point and Saint Matthews using Taylorsville Road and Breckinridge Lane. This option, which is shown in **Figure 6**, could be implemented as a pilot project during the holiday shopping season or other peak events while evaluating stops, frequency, and route length. It could also assist pedestrians' and bicyclists' need to cross major conflict areas like interchanges.

Another idea for mass transit is bus rapid transit (BRT). It has the travel quality of rail transit and the flexibility of buses. A BRT system combines intelligent transportation systems technology, priority for transit, cleaner and quieter vehicles, and rapid, convenient fare collection with an integrated land use policy. The power of the idea is that the buses are given some sort of right of way priority to decrease their travel time while remaining flexible about the route. This priority can be with the use of exclusive transit ways, HOV lanes, expressways, or ordinary streets with signal preemption.

Bicycles

A bicycle facility network enhances the available options for transportation alternatives. It is a more economical and environmentally friendly choice whether the rider uses it for exercise, recreation, or transportation. A complete network of bike routes can add to the quality of life and value of a neighborhood. The following potential routes link the local neighborhood streets and arterials for access to local and regional destinations and are shown in **Figure 7**.

• Bunsen Parkway	• Lyndon Lane
• Chadwick Road	• Nottingham Parkway
• Christian Way	• Oxmoor Woods Parkway
• Colonel Anderson Parkway	• Seaton Spring Parkway
• Dorsey Way	• Shelbyville Road
• Hurstbourne Parkway	• Tamarisk Parkway
• Leesgate Road	• Whipps Mill Road
• Linn Station Road	• Whittington Parkway

In order to provide options now and in the future, a policy of including bicycle facilities into all roadway projects is important. Since both arterials in the area - Hurstbourne Parkway and Shelbyville Road - are indicated as bicycle corridors by Louisville Metro Planning and Design, it is important for bicycle facilities to be a part of all improvements. This would include finding safe solutions through interstate interchanges and arterial roadway intersections. The solutions may involve some on-street connections/crossings and shared use paths and pathways that ensure the free flow of bike and pedestrian traffic.

Bike lanes can also be orchestrated with traffic calming in the neighborhoods. This is accomplished by striping the existing oversized roads to a typical ten to twelve foot motor vehicle lane and a five to six foot bike lane. The downsizing of the motor vehicle lane can psychologically reduce the roadway width and slow the driver down. Parking is illegal in a bike lane and the 18'-wide roadways are not wide enough to accommodate a travel lane, a bike lane and a parking lane. A potential solution could be to designate the lane as a shared use lane for bikes, pedestrians in areas without sidewalks, and on street parking.

Pedestrians

Every outing begins and ends as a pedestrian trip whether it's to or from an automobile, a bus stop, a local business or a recreational walk through the neighborhood. Due to its importance, pedestrian facilities should be designed into every road improvement project as any other form of transportation. Pedestrians currently lack consistent, adequate sidewalks or walking paths to local and regional destinations and even inside neighborhoods. Sidewalks are especially needed along Shelbyville Road and Hurstbourne Parkway due to their regional nature and to provide better access to the transit system. The existing sidewalk locations along these arterials are shown in the Inventory/Analsysis maps of the corridors in Chapter 3 of the Small Area Plan. **Figure 8** shows the existing sidewalk locations in the City of Hurstbourne.

Another issue for pedestrians is the ability to cross interchanges such as I-64 and Hurstbourne Parkway. Existing worn paths with the current roadway configuration confirm the need for a safer route. Conveniently located crosswalks and pedestrian signals, which do exist at many of the large intersections, are needed to safely manage conflict points between pedestrians and motor vehicles. A walking speed of 3.5 feet per second may need to be considered as recommended in the *Draft Guidelines for Accessible Public Rights of Way*. The crossings should also incorporate accessible standards of ramps and tactile warnings. A shared use path that allows for continuous travel could reduce the conflict potential with motor vehicle traffic.

Transportation Systems Management Program (TSM)

TSM can include a whole host of actions but the most prevalent are just good traffic engineering and traffic management actions and involve:

- minor roadway improvements (i.e. turn lanes)
- signal phasing and timing
- signal coordination
- incident management (detecting, responding to, and clearing incidents)
- ramp metering
- ITS applications (better traffic monitoring and information to travelers thru detectors, cameras, DMS, Highway Advisory Radio, etc)
- reversible lanes
- access management (driveway location and design, signal location, median location and design, etc)

One particular location that may be in need of some systems management is the lane assignment and signing from Oxmoor Lane to Shelbyville Road westbound and Shelbyville Road westbound from Norwood to the I-264 on ramp. Overhead diagrammatic signs at these locations would aid drivers in lane choice approaching the I-264 on ramp. The marking and signing in this area are not always clear to motorists that are unfamiliar with the area, which is common near a regional shopping mall. Revised lane assignments in this area were considered; however, the distance available for lane transitions was insufficient. There is also a conflict with the transit stop in front of Wendys associated with revised lane assignments. Diagrammatic signs could help unfamiliar drivers with lane choice in this area.

Signal Coordination

Hurstbourne Parkway is currently coordinated from Stony Brook Drive (three signals south of Taylorsville Road) to Shelbyville Road. Traffic signals on Shelbyville Road are coordinated from 8-Mile Center to the west including Christian Way. Based on the cycle lengths in the timing plans provided by the KYTC, the signal on Shelbyville Road at Norwood/Oxmoor Lane is not coordinated with the signals at Christian Way and 8-Mile Center during the majority of the day. The signals on Shelbyville Road at Lyndon Lane and Whittington Parkway are not included in a coordinated system. The Shelbyville Road corridor and the Hurstbourne Parkway corridor are not coordinated with one another. The signal at Taylorsville Road and Stony Brook Drive is not coordinated with the signal at Hurstbourne Parkway.

A maximum signal spacing of a half mile is typical for consideration of coordination. The spacing between Lyndon Lane and Whittington Parkway on Shelbyville Road is approximately one mile which may be a good signal system boundary across which coordination may not be appropriate. All of the other signals mentioned above are within a half mile of one another. The signals on Hurstbourne Parkway, Shelbyville Road, and Taylorsville Road are maintained and operated by the KYTC. Any signal coordination should be based on a travel time study and should be requested for evaluation by KYTC central office. This request can be made through the KYTC District 5.

Incident Management and ITS Applications

TRIMARC is the monitoring and freeway management program for Louisville Metro. TRIMARC uses ITS technology to detect, respond to, and clear incidents as well as inform motorists of roadway and traffic conditions. Shelbyville Road and Hurstbourne Parkway could benefit from the expansion of this system to include arterials.

Access Management

Currently, the major arterials of Shelbyville Road and Hurstbourne Parkway have numerous entrances to the adjoining properties. Excessive and poorly designed access points can impede traffic flow and create awkward traffic movements in and out of the properties. This adds to congestion and safety concerns on the arterial roadways. Access management is a method of providing access while maintaining or improving arterial traffic flow and safety. The various forms of access management that can be used throughout the corridors are: frontage roads, medians, consolidating and sharing access points, and creating right-in/right-out access points. Many of these ideas rely on designing better access points, limiting the number of them, and locating them in safer places. This lowers the number of traffic conflicts, provides more distance between access points and minimizes traffic back-ups due to turning vehicles.

Frontage roads have already been effectively used on Shelbyville Road in some locations. Frontage roads gather the traffic from individual properties and direct it onto the major roads at a safe, distinct entrance. This idea could be used for many of the residential properties along the corridors or those businesses located in neighborhood form districts.

Raised medians in the center of the roadway also can control where vehicles turn. Medians restrict left turning movements to specific locations which decrease the number of conflict points and provide drivers with clear expectations for anticipating turns. Medians also narrow the roadway which can moderate speeds. The medians also can be landscaped to enhance the beauty and character of the area. Raised medians are the most effective way of creating right-in and right-out entrances. Creating effective right-in / right-out entrances with islands is difficult with tight right of ways and small parcels due to the size of the island necessary.

Consolidating multiple access points and creating shared entrances is an effective access management strategy in developed areas. This can be done by using an existing entrance for two lots, or by creating a new entrance between two lots. This approach requires cooperation from property owners to allow for access easements and/or crossover agreements. Part of this strategy may include redesigning entrances to operate more efficiently and safely by simplifying and relocating them. Simplifying entrances gives drivers better cues for how to travel on the roadway and where to turn into a business, therefore minimizing driver confusion and errors.

Specific areas of concern in the study area with regard to access management include, Hurstbourne Parkway near I-64, approaches to the intersection of Shelbyville Road and Hurstbourne Parkway, the right-out from Oxmoor Mall between Oxmoor Lane and Christian Way. The access management concerns on Hurstbourne Parkway near I-64 are being addressed by the planned interchange project with closure of entrances, modification of the frontage road north of I-64 and east of Hurstbourne Parkway, creation of a frontage road south of I-64 and west of Hurstbourne Parkway and improved access roads to the Holiday Inn and Red Roof Inn and north of Olive Garden. The access management concerns near the intersection of Shelbyville Road and Hurstbourne Parkway are being addressed by the planned intersection and roadway improvement project at that location with right-in / right-out entrances created by barrier medians on each approach.

The right-out from Oxmoor Mall is a concern because it leads to an exclusive right turn lane to Christian Way. This right turn lane is designated as such with signs that read “RIGHT LANE MUST TURN RIGHT” and pavement markings that include right turn arrows, “ONLY” and a solid white lane line. According to the *Manual on Uniform Traffic Control Devices* (MUTCD), a standard width, single, solid, white line is to be used to discourage lane change maneuvers but not prohibit them. The location of this right-out exit encourages this lane change maneuver in order to continue east on Shelbyville Road. It also restricts the flow of right turning vehicles to Christian Way when drivers exiting the mall stop to make the maneuver. This maneuver is made especially difficult by the traffic queued up eastbound from the Christian Way signal. Options for improving the right-out of Oxmoor Mall include prohibiting the lane change maneuver with a barrier median, metering the exit, closing it, or continuing the lane through the Christian Way intersection.

Prohibiting the lane change maneuver with a barrier median would effectively close the entrance since it forces the driver back to Christian Way at which point there is another exit from the mall. The vehicles that did continue to use the exit would be encouraged to make a U-turn on Christian Way to get back to Shelbyville Road or encouraged to continue through the City of Hurstbourne. The barrier median itself could also be a safety hazard.

Metering the exit with a signal that is coordinated with the signal at Christian Way would improve the traffic flow conditions. The signing and pavement marking would need to be revised to not discourage the lane change maneuver. This option only minimizes the effectiveness of this exit.

Closing the exit completely would eliminate the problem but would also place more demand on the left turn movement from Oxmoor Mall to Christian Way at the access point closest to Shelbyville Road. Left turn movements are inherently more difficult than right turn movements, and therefore experience more delay.

Continuing the eastbound lane through the intersection of Christian Way to Whipps Mill Road as a third lane would improve traffic flow at this location and through the area. This option eliminates the excusive right turn lane onto Christian Way and requires widening Shelbyville Road from Christian Way to Whipps Mill Road.

Alternative Route Development

The development of alternative east-west and north-south routes will draw traffic away from Shelbyville Road and Hurstbourne Parkway. The Bunsen Parkway extension will be an alternative east-west route. Alternative north-south routes could include extensions of Christian Way north of Shelbyville Road and south of I-64 and widening of Moser Road. These routes are illustrated in **Figure 9**.

Neighborhood Improvement Alternatives

In October and December of 2003, KIPDA performed traffic counts on several streets in the City of Hurstbourne. It should be noted that the data provided by KIPDA was raw data with some obvious errors such as unreasonably low or high traffic volumes. KIPDA staff members expressed that they were not comfortable with the raw speed data given at some locations. Some of these count locations were too close to stop conditions to provide accurate speed data and should only be used

for count data. From conversations with the manufacturers of the traffic data recorders, speed, classification, and count data can be affected when the counters are placed on wide roadways where vehicles may avoid driving squarely over them. The data provided by KIPDA is valid, usable data but should be analyzed by an experience professional before being used for analysis, decision making or conclusions.

Public comments received from questionnaires, public meetings and neighborhood meetings echo the concerns of the SAT regarding traffic volumes and speeds on local, residential roads. Automatic tube counts around the City of Hurstbourne and the traffic volumes modeled by KIPDA illustrate the volume of traffic that uses the surrounding local streets to avoid the congested arterials of Shelbyville Road and Hurstbourne Parkway. A travel time study of various routes through and around the City of Hurstbourne show why this cut-through demand exists. Traffic that is passing through a neighborhood, but does not have a destination in the neighborhood, is considered "cut-through traffic." The multi-modal and roadway improvements recommended for these arterials will help to minimize future increases in this demand but there are also techniques that can be implemented on the local streets to minimize and control this traffic.

The local streets in the cities of Bellemeade and Hurstbourne are not in the KIPDA model. Accurately estimating increases or decreases in cut-through traffic is nearly impossible based on the uncertain development plans and schedules, implementation and timing of roadway improvements, and other developments in the area. However, several general projections and statements can be made. There is no doubt that the cut-through traffic demand will continue to increase as traffic in the area increases and arterial delay increases without arterial improvements. The developments of Oxmoor Farm and UL Shelby Campus will generate more traffic in the area. Although the improvements to Shelbyville Road and Hurstbourne Parkway will help to minimize increases in cut-through traffic demand, they are unlikely to have a significant impact on existing cut-through volumes in the City of Hurstbourne. The current cut-through volumes are unlikely to drop significantly since the travel time through the city is less than or equal to the travel time on the arterials even when there is no significant delay during off peak hours.

Based on field observations, several local streets have been identified as having the most cut through traffic and being the most conducive to speeding and should be the focus of a traffic calming plan. These streets include Lyndon Lane, Nottingham Parkway, Leesgate Lane, Linn Station Road, Colonel Anderson Parkway, Oxmoor Woods Parkway, Chadwick Road, and Bellemeade Road.

The first decision of a traffic calming plan should be to determine the goal to be achieved. Part of this decision should be the collection of data through monitoring and enforcement and the analysis of that data. After the goal is identified, suitable techniques are chosen to meet that goal. Some techniques are used to control the speed of traffic while others are used to control the volume of traffic and some may do both. A good traffic calming plan should use multiple techniques for diversification, but should be carefully planned to avoid arbitrary randomness. Traffic calming measures should be installed on an area-wide basis simultaneously to avoid transferring the problem from one local street to another. If the problem is found to be seasonal or during peak hours, consideration should be given to techniques which can be implemented on a seasonal or hourly basis to minimize impact to the residents. The development of a traffic calming plan and the selection of traffic calming techniques should include extensive public involvement from residents, neighborhood associations, and public officials. Ultimately, the techniques used and the location of them should be agreed to by 75-80% of the affected property owners. The affected property owners not only include those along the road but also those along adjacent streets where traffic could be diverted and those that must regularly use the road.

There are many techniques that can be used to minimize the volume or slow down traffic through an area. The scope of this part of the study is to review several techniques that address the public concerns while maintaining or improving the visual quality of the roadway and strengthening the existing roadside character. **Table 19** on page 31 shows some of these techniques and the associated fiscal costs, benefits, drawbacks, and implications which should be considered carefully in the selection of and the design process of a traffic calming plan.

Volume Control

The capacity of the local streets is sufficient to accommodate existing and expected traffic volumes. However, if the volume of traffic is unacceptable by the residents for reasons associated with quality of life, then a traffic calming plan that minimizes volumes should be considered. However, it should be noted that reducing "cut-through" traffic will increase traffic demand and delay on alternate routes including Whipps Mill, Hurstbourne Parkway, and Shelbyville Road which must be used for access to or from these areas.

Gateway treatments with plantings and narrower entrances draw attention to the fact that traffic is entering a residential area. This can discourage some traffic from entering and slow down the traffic that does. Gateway treatments are certainly an aesthetic treatment that can improve the appearance of an entrance.

A gated community would definitely prevent cut-through traffic; however, gated communities come with significant drawbacks. The drawbacks of a gated community include the limitation of access to visitors and delivery vehicles to private and public uses in the area such as schools and churches. This limitation would require full-time manned guard shacks when the gates are closed.

The travel time study through and around the City of Hurstbourne showed that it is faster to take the shorter route through the City of Hurstbourne than it is to use the arterials of Shelbyville Road and Hurstbourne Parkway even at off peak hours obeying all of the stop signs and speed limits. For this reason, drastic measures such as full and partial street diverters that force circuitous routes may be needed to prevent or significantly limit the volume of cut-through traffic.

Strategically placed partial street diverters that limit traffic to one way flow or full diverters that re-route traffic can increase the travel length and time through an area without preventing it completely. The use of automatic gates will increase installation and operational costs but will minimize impacts to residents. Another advantage of gates is that they can be closed only when needed further minimizing the impact to residents. One example of a strategic diverter would be Lyndon Lane south of Colonel Anderson Parkway; this could be expected to minimize cut-through traffic on Lyndon Lane from the proposed Oxmoor Farm development even if the connection is made as planned. A significant drawback of diverters is the increase in traffic on alternative routes where traffic is re-routed. In the case of the aforementioned diverter, the traffic volumes on Colonel Anderson Parkway can be expected to increase. Emergency access is another concern that must be addressed.

Strategic limitation of turning movements at key locations to create right-in / right-out entrances can minimize cut-through traffic by limiting accessibility. Peak hour turning prohibitions of key

movements may achieve the same result, but they may become an enforcement and safety concern.

A program of random roadblocks at key locations can also be used to discourage cut-through traffic. This program should include notification to residents to limit the impact to them. Signs should be permanently mounted at the entrances to the neighborhood to warn non-residents of the roadblocks even when not in use. The roadblocks could be implemented only when needed. The advantage to this approach is the flexibility of gates at a fraction of the cost and without the commitment.

Speed Control

Reducing "cut-through" traffic can minimize speeding by reducing volume, but if speed is a concern it should be addressed with speed control measures. Although speed control techniques are not intended to reduce volume, when combined with improvements on the arterials, they may create the perception that the arterials are faster thereby reducing the volume.

Some speeding problems can be minimized with revised or reinforced signing and enforcement which should be considered as a first traffic calming technique since the costs and drawbacks are minimal. Changeable message signs that display an approaching vehicle's speed can be used as a speed limit sign supplement to alert drivers of their speed and collect data.

The remaining speed control techniques can be divided into vertical and horizontal measures. Vertical speed control measures include speed humps, raised cross walks or speed tables, raised intersections and textured pavement. Speed humps are in excess of twelve feet wide and are designed to allow traffic to comfortably travel at a desired speed, typically 20-25 mph depending on spacing. Speed humps should not be confused with speed bumps which are much more abrupt and slow traffic to a near stop. Typical guidelines for the installation of speed humps recommend usage on roads with 500-3,000 vehicles per day and 85th percentile speeds greater than 10 mph over the speed limit (this means 15% of the daily traffic is traveling above 35 mph on a 25 mph roadway). Speed humps are typically spaced every 300'-500' along an uninterrupted stretch of roadway. The discomfort and hassle to motorists associated with speed humps can result in a reduction in traffic volumes. Speed tables are similar to speed humps that are flat across the top. When used at a cross walk, a speed table is referred to as a raised cross walk. Significant drawbacks to vertical deflection measures are the noise and air pollution associated with traffic decelerating (braking) and accelerating before and after the deflection respectively and the noise associated with the vibration or jarring of the vehicles. For this reason, vertical deflection measures should only be placed in front of willing property owners. The cost of vertical deflection measures is proportional to the aesthetics.

Horizontal speed control measures include traffic circles, roundabouts, roadway narrowing and deflections. Traffic circles are islands placed in the center of an intersection that allow traffic to continue to flow without stopping. The traffic circle must be large enough to deflect traffic to lower speeds. Traffic approaching the traffic circle must yield to traffic flowing counterclockwise around the center island. Traffic circles are appropriate for most local neighborhood intersections such as the intersections of Lyndon Lane / Nottingham Parkway, Lyndon Lane / Oxmoor Woods, Linn Station / Nottingham. Traffic circles at these locations are feasible with minor widening or intersection modifications. Other locations that may be suitable for traffic circles in place of the existing stop-controlled intersections include intersections along Oxmoor Woods Parkway, Colonel Anderson Parkway, Nottingham Parkway, and Linn Station Road, and on Charing Cross Road at Bellemeade Road and North Chadwick Road.

Roundabouts are similar to traffic circles but include features such as splitter islands and re-aligned approaches that facilitate higher volumes found on collector roads. The intersection of Whipps Mill and Lyndon Lane may be an appropriate location for a roundabout. A modified intersection diverts or restricts the flow of traffic and may be considered at Lyndon Lane and Oxmoor Woods and would work with or without connections to the Oxmoor Farm development.

Narrowing the roadway is a psychological technique that works on the fact that drivers are less comfortable driving at higher speeds on narrow roadways. Several methods can be used to achieve this narrowing including striping for bike lanes, redesign roadways with two narrow lanes without a median, widening existing medians, or drawing-in outside edges of pavement. These techniques have names like bulbouts, neckdowns, knuckles, and chokers. In addition to speed reductions, these methods have the additional advantages of allowing bike lanes, shortening the length of crosswalks, and improving aesthetics if done properly. Bike lanes on the 18'-wide roadways in the City of Hurstbourne would prohibit on street parking which becomes an enforcement issue. A wider bike lane (6'-8') designated as a shared use lane may be a solution to allow temporary parking, bicycle and pedestrian usage.

Other techniques that involve horizontal deflection are lateral shifts or curves in the roadway commonly referred to as chicanes. Chicanes reduce speed by shortening sightlines and preventing long straight stretches of road. Recent trends indicate deflection techniques are gaining popularity over narrowing techniques.

Connectivity Between the City of Hurstbourne and the Oxmoor Farm Development

As previously stated, a major concern with several Study Advisory Committee members, as well as residents of the City of Hurstbourne, is the amount of traffic generated by the proposed Oxmoor Farm development that is anticipated to cut through the City of Hurstbourne. It should be noted that the Oxmoor Farm Conceptual Master Plan (shown in **Figure 3**) and its associated zoning have been approved by the appropriate governing authorities. It should also be noted that all streets in the City of Hurstbourne are owned and maintained by the City of Hurstbourne; therefore, any closure of those streets is a City decision which may have legal implications that should be explored by the City. The expected traffic volumes on Lyndon Lane south of Shelbyville Road and on Linn Station Road west of Nottingham Parkway shown in **Table 11** do not exceed the traffic capacity of these streets; therefore this concern becomes a quality of life issue based on what is appropriate for this local roadway classification.

Some Hurstbourne residents have called for the elimination of connections to the proposed development through the closure of the City of Hurstbourne streets. It should be noted that eliminating these connections will do nothing for the existing cut-through traffic concern. The elimination of all connections to the proposed development at the City of Hurstbourne boundary would require five closures: at Lyndon Lane, Lincolnshire Drive, Samford Drive, Cheffield Drive and Linn Station Road. With modification to the current development plan, disconnection of three streets inside the proposed development would essentially annex the proposed residential are to the City of Hurstbourne without connectivity to the proposed commercial uses. The developer is unlikely to make this change since the accessibility and connectivity to those commercial uses is expected to be a selling point of that residential property. Lack of direct access to the commercial uses in the proposed Oxmoor Farm development, Bunsen Parkway, and potential connections with I-64 are drawbacks to eliminating these connections. Elimination of the connection between Christian Way and Oxmoor Woods Parkway will increase traffic on Lyndon Lane. The traffic that currently uses Christian Way to access the City of Hurstbourne will be forced to use Lyndon Lane.

By inspection, the existing three way stop at Stamford Drive and Oxmoor Woods Parkway is inappropriate. Therefore, if Stamford Drive is not connected to the proposed development, the existing three-way stop at Oxmoor Woods Parkway should be made a one way stop.

Elimination of the Lyndon Lane and Linn Station Road connections only may deter some cut through traffic due to the slightly more circuitous route. The traffic volumes on Oxmoor Woods Parkway will increase significantly and the volumes on the majority of Lyndon Lane and Linn Station Road will decrease only slightly from the proposed plans. If the Linn Station Road connection is made, a traffic circle should be considered at the intersection of Linn Station Road and Colonel Anderson Parkway.

Connectivity between land uses is necessary to provide alternative routes and avoid unnecessary traffic on the arterials. These connections will improve traffic flow in and around the area by providing alternate routes and direct access to adjacent destinations or roadways in the proposed Oxmoor Farm Development. This is especially true for the residents in the City of Hurstbourne. With connectivity, there may be the need for a traffic calming plan to control traffic to appropriate volumes and speeds. If any of these connections are eliminated, consideration should be given to only eliminating vehicular traffic while still allowing pedestrian and bicycle access.

Louisville Metro's Cornerstone 2020 Comprehensive Plan states on page 74, "The Neighborhood Form should provide for accessibility and connectivity between adjacent uses and neighborhoods by automobile, pedestrian, bicycles and transit." The March 2003 Land Development Code (LDC), which was adopted by the City of Hurstbourne, states in the Neighborhood Form District design standard 5.4.3.1.a, "Developments that create public and private streets shall connect with and provide for the future extension of the community's street network."

The current LDC dated March 2006, which has not been adopted by the City of Hurstbourne, states the following in Chapter 5 Part 9, Transit and Connection Standards:

A. Generally Applicable Standards
1. Direct pedestrian or vehicular connections are required as follows:
a. Residential Developments
i. Existing stub streets shall be extended to serve the new development and connect with adjacent residential areas unless the Director of Works and the Planning Director jointly determine such extension is infeasible due to physical constraints or when the connection would increase the street classification of the extended street inappropriately or a connection would be the primary means of access for a high density development through a low density development. This requirement is not subject to the LDC waiver provision listed in Chapter 11, Part 8, however the legislative body may approved a development plan with an alternative plan for connectivity in conjunction with a change in zoning or review of Planning Commission action on a development plan pursuant to section 11.7.5 of the LDC.
ii. Sites abutting vacant parcels shall create stub streets to serve future developments unless the Director of Works and the Planning Director jointly determine such extension is infeasible due to physical or environmental constraints.
iii. All residential block faces shall be no more than 1,600 feet in length.
iv. Pedestrian paths linking adjacent residential areas may be substituted for street connections, when approved by the Director of Works and the Planning Director.
v. Pedestrian paths shall be provided to connect residential developments with adjacent non-residential uses, unless the Planning Director determines such connection is redundant or inappropriate because of the nature of the non-residential use.
b. Non-Residential Developments
i. A Clearly defined, safe pedestrian access shall be provided from adjacent public rights-of-way (public sidewalk) through off-street parking area to non-residential building entrances. If a transit stop exists or is proposed adjacent to the site; the safe pedestrian access shall connect to the public sidewalk within 50 feet of the transit stop.
ii. Abutting non-residential uses shall provide for vehicular and pedestrian circulation between their sites, through parking lot or alley connections, hard surface walkways, and similar measures.
iii. Non-residential uses adjacent to vacant residentially zoned sites shall provide an access easement for pedestrian access, unless the Planning Director determines such extension is infeasible due to physical or environmental constraints. This requirement is not subject to the LDC waiver provision listed in Chapter 11, Part 8..
iv. Curb cuts –The number and width of curb cuts shall be limited in conformance with the access management principles contained in Chapter 6 Part 1. Sites with multiple buildings shall have unified/joint access.
v. Pedestrian walkways traversing a parking lot with more than 100 spaces shall meet the following standards:
- Walkways adjacent to parking spaces shall be at least 4 feet wide and shall be separated from vehicles by a change in grade (4 inch minimum), curbing, bollards, wheel stops or landscaping. Walkways connecting handicapped parking spaces with building entrances shall be at least 5 feet wide.
- Walkways crossing parking lot drive aisles shall be delineated by striping, contrasting pavement materials, elevated pavement, or a combination of these measures. Walkways shall not be delineated to pass behind a row of parking spaces.

vi. Truck Access – Site access shall be designed so that truck and service vehicle traffic generated by a development shall gain access to the site from the primary corridor rather than through adjacent residential areas.

Shelbyville Road

The widening of Shelbyville Road to six lanes is in KIPDA's 2030 Horizon Plan and shows up in the baseline model in 2013. According to KIPDA's travel demand model, increasing the capacity of the roadway by adding a lane to Shelbyville Road will increase the traffic volumes approximately 10,000 vehicles per day (over 30%). This increase in volume will offset the increase in capacity resulting in no significant change in LOS to the intersections along Shelbyville Road. This shows that the demand in the area exceeds the capacity and therefore the traffic volumes are limited by the capacity of the roadways. However, increased capacity and volume on Shelbyville Road will relieve pressure on alternative east-west routes such as I-64. Widening Shelbyville Road to six lanes is not favored by members of the Study Advisory Team for fear of a loss of community character.

University of Louisville Shelby Campus

The connection of Whipps Mill Road, Hurstbourne Parkway, and Shelbyville Road through the University of Louisville Shelby Campus is included in the Master Plan First Phase shown in **Figure 2**. This connection is also in the Kentucky Transportation Cabinet's Six Year Plan for construction in 2008. The benefits of these connections are the connectivity and alternative route options which lower the demand at the intersection of Shelbyville and Hurstbourne. According to KIPDA's travel demand model, the eastbound volumes on Shelbyville Road at Hurstbourne Parkway will decrease

about 1,000 vehicles per day. With this connection, this traffic would access North Hurstbourne Parkway through the Shelby Campus from Whipps Mill Road or Shelbyville Road. The northbound volumes on Whipps Mill Road at the proposed connection show the most significant change with an increase of 1,326 vehicles per day. The southbound volume on Whipps Mill Road did not change significantly with this alternative. The increased traffic volume on Whipps Mill Road will not require modification to four lanes. A roundabout may be appropriate at the Whipps Mill Road intersection depending on the actual traffic volumes. Capacity improvements will also be needed at the intersection of Shelbyville Road and Whipps Mill Road and may be needed at Whipps Mill Road and Lyndon Lane. The width of Whipps Mill Road may make these improvements possible with minimal widening if any.

Signalization will likely be warranted at the connection to Hurstbourne Parkway. The location of this connection and its signal need to be evaluated with a simulation model along Hurstbourne Parkway to determine the impact and best location. The location of the existing curb cut for the parcel on the east side of Hurstbourne Parkway is approximately 1000 feet from Tamarisk Parkway to allow for possible future signalization of that intersection. Ideal signal spacing in this area is generally considered to be 1200 feet. It is also typically ideal to limit the number of signals along an arterial and provide connectivity to access those signals from nearby properties. However, the cost and feasibility of those connections can prevent this ideal scenario.

The increase in traffic on Whipps Mill associated with this connection does raise safety concerns. The pavement width of Whipps Mill does facilitate higher than desirable speeds along this residential street. The addition of bike lanes along Whipps Mill would not only provide an excellent and inexpensive multi-modal alternative but the narrower lanes would also provide traffic calming to lower speeds and increase safety. Bike lanes could be added to Whipps Mill from Shelbyville Road to Shelby Campus with striping only.

Hurstbourne Parkway / Tamarisk Parkway

The traffic volumes at Tamarisk Parkway and Hurstbourne Parkway meet the peak hour volume warrant (3) for one hour during the AM peak. Available data is insufficient to eliminate the possibility of the 4-hour and 8-hour volume warrants (1 and 2 respectively); however, available data does indicate that it is unlikely that these warrants would be met. This intersection does not meet the crash experience warrant (7). It should be noted that signalization of this intersection could draw more traffic to that location due to the increased capacity and will likely increase delays during the off peak times.

An alternative to signalization at Tamarisk Parkway would be to provide an alternative means of ingress and egress from the Old Dorsey Place subdivision to Hurstbourne Parkway at a traffic signal. Several feasible locations exist for this connection. The first location is the existing connection between Dorsey Way to Forrest Bridge Road which is currently gated. Based on recent development on Forrest Bridge Road, there is some concern regarding the capacity of the intersections of Forrest Bridge Road with Forrest Green Boulevard and Forest Green Boulevard with Hurstbourne Parkway. The additional traffic associated with this connection is the concern. A connection between the existing stub streets to the east of this location would require the construction of a bridge across the creek. The second location is the stub street of Medina Way. The Medina Way connection could be made to connect through the Forum Office Park parking lot to the existing signal at Hurstbourne Trace or to the University of Louisville property east of Hurstbourne Parkway when that property is developed. Both Medina Way connections would require access easements from adjacent property owners and small roadway construction or improvements. Other locations along Tamarisk Parkway would require the acquisition of at least two residences. These connections are shown in **Figure 10**.

These connections have some potential to increase traffic through the Old Dorsey Place subdivision, but existing connections and traffic patterns do not suggest a significant change. One-way connections are less desirable from a connectivity standpoint and the adjacent property owners are less likely to agree to one-way connections that do not benefit them. For connectivity and alternative route availability, two-way connections are more desirable. If a signal is not installed at Tamarisk Parkway, consideration should be given to providing access to the Home Builders Association of Louisville (across the street from Tamarisk Parkway) from the proposed roadway network in Shelby Campus.

Shelbyville Road - Christian Way to Whipps Mill Road

This section of Shelbyville Road is especially problematic with the unwarranted signal at 8-Mile Center, which is too close to the signal at Christian Way, and the unsignalized intersection of Whipps Mill and the multitude of entrances in between. The spacing between the Christian Way and 8-Mile Center signals is insufficient for the opposing left turns in between to function properly. The entrances in the area create a safety concern and hinder the flow of traffic along Shelbyville Road. The goals in this area are to improve the flow of traffic along Shelbyville Road and still provide access to the existing businesses. There does not appear to be a solution that will satisfy all parties concerned in the area. However, with cooperation, a good solution can be achieved that improves both traffic flow and business access in the area.

8-Mile Center

To maintain the 8-Mile Center signal and eliminate the opposing left turn conflict with Christian Way, several alternatives were considered. One alternative that was considered was to add a second westbound left turn lane at Christian Way. Analysis of this alternative indicates that queues are still in excess of storage and conflict with the eastbound left turn at the 8-Mile Center signal. Dual left turn lanes at this location are of little value when access to the left turn bays and the exclusive left turn phase are prevented by the through-movement queue. The capacity of a dual left turn and a single left turn are limited by the volume of left turning vehicles that can access the left turn bays. A dual left with one of the left turn lanes extending back into a through travel lane on Shelbyville Road would create an unexpected lane assignment change, and the lane change maneuvers would decrease through-movement capacity at that location. With the minimal storage of the existing left turn bay, this option would only function a little better than side by side opposing left turn lanes. Side by side left turns were deemed to be unjustified due to the required widening of Shelbyville Road and the low volume of left turns to 8-Mile Center.

The second alternative considered to maintain the 8-Mile Center signal and eliminate the opposing left turn conflict with Christian Way was to eliminate the left turn movements from Shelbyville Road at 8-Mile Center. Eliminating these movements would obviously eliminate the conflict with Christian Way and would also allow for improved signal timing with more time dedicated to the Shelbyville Road through movements. Prevention of these movements with channelization or barriers cannot be done while maintaining the signalization from the entrances on each side. These movements would simply be prohibited with signing and a lack of signal accommodation. The existing barrier median should be re-aligned to stay on the south side of the westbound left turn lane from Christian Way to 8-Mile Center. Unfortunately, since the prohibited movements cannot be effectively

prevented, this alternative becomes an enforcement issue that, if not sufficiently enforced, can cause more problems than it solves.

Elimination of the 8-Mile Center signal would also obviously eliminate the conflict with Christian Way. Elimination of the 8-Mile Center Signal would reinforce the need for access management in this area to maintain access to adjacent properties. The 8-Mile Center signal is not warranted according to a KYTC study dated April, 28, 2005. Removal of this signal also improves the signal spacing in the area. Consistent spacing between signals along a corridor provides better coordination opportunities for improved progression. The existing signal spacing is as follows:

1,900' Oxmoor Lane to Christian Way
400' Christian Way to 8-Mile Center
700' 8-Mile Center to Whipps Mill
1,200' Whipps Mill to Lyndon Lane

The removal of the 8-Mile Center signal would result in the following signal spacing:

1,900' Oxmoor Lane to Christian Way
2,300' Christian Way to Lyndon Lane

Whipps Mill Road

Another alternative that was considered for this area was the restriction of some or all movements at Whipps Mill Road and Shelbyville Road. This alternative increased the demand on Lyndon Lane and would require more widening than was deemed to be reasonably feasible or desirable to members of the SAT.

Signalization of the intersection was also considered. The removal of the 8-Mile Center signal and the installation of a signal at Whipps Mill Road would result in a signal spacing of:

1,900' Oxmoor Lane to Christian Way
1,100' Christian Way to Whipps Mill
1,200' Whipps Mill to Lyndon Lane

Current traffic volumes at Whipps Mill Road cause failure of several movements, and they meet warrants 2 (4-hour) and 3 (1-hour) for a traffic signal and likely meet warrant 1 (8 hour). If Shelbyville Road remains four lanes instead of six lanes, the traffic demand on Whipps Mill Road is expected to increase by at least 30% or 1,000 vehicles per day. In addition, a connection between Whipps Mill Road and Hurstbourne Parkway through the Shelby Campus, as planned by the University of Louisville and the Kentucky Transportation Cabinet, may also increase the demand on Whipps Mill Road at this intersection by an additional 1,000 vehicles per day. Widening Shelbyville Road to six lanes west of Whipps Mill Road and signalization of the intersection of Shelbyville Road and Whipps Mill Road would help to accommodate this additional traffic demand that Whipps Mill Road adds to and removes from Shelbyville Road.

The signalization of this intersection must be evaluated with consideration of the high percentage of southbound right turns. The southbound volume from Whipps Mill Road is almost entirely right turns. Based on a comparison of the southbound right turning traffic in the AM peak with the eastbound left turning traffic in the PM peak, it is apparent that the eastbound left turning traffic demand far exceeds the capacity of the unsignalized left turn. If Shelbyville Road is maintained with 4 lanes, Whipps Mill Road is expected to carry over 850 southbound right turning vehicles in the AM peak hour in 2030. Ideally it would be expected that the PM peak hour volume of the opposite movement (eastbound left turn to Whipps Mill Road) would equal or exceed the AM peak hour volume. However, based on counts and observation, in the PM peak hour the eastbound left turning traffic onto Whipps Mill Road is limited by the unsignalized movement to approximately 350 vehicles. This illustrates the need for a dual left at this location.

Eastbound vehicles that cannot turn left at Whipps Mill Road continue up to Lyndon Lane or Hurstbourne Parkway to make a left turn at those signalized intersections. The planned intersection improvements at Shelbyville Road and Hurstbourne Parkway will include the addition of a second eastbound left turn lane, which will increase the capacity of that movement. The signalization of Whipps Mill Road may also allow for more efficient timing of the signal at Lyndon Lane and Shelbyville Road by reducing the eastbound left turn traffic demand and balancing the eastbound and westbound left turn movements at that location.

A dual right southbound overlapped (protected movement running concurrent) with the eastbound left is needed for the southbound right during the AM peak hour in 2030. If a barrier median is used for access control between Christian Way and Whipps Mill, the associated U-turns needed for access to the adjacent property may conflict with the southbound right turn overlap. If the southbound right turn overlap is not provided and this movement can only turn right on red yielding to the U-turning traffic, the LOS for that movement will decline. An additional westbound lane tying into the westbound lane that is added at Arterburn Drive could be added with a free flowing southbound right turn from Whipps Mill Road.

Access Management

Access management in this area is critical to improving traffic flow on Shelbyville Road. A barrier median from Christian Way to Whipps Mill was considered to effectively make all the existing access points right in and right out only. Consolidation, minimization, and improvement of the existing access points are still needed to improve safety and traffic flow along the arterial even with a barrier median. Some minor widening would be needed to accommodate the U-turns at Whipps Mill and Christian Way associated with this alternative. The conflict between the U-turns and the right turn overlap at Whipps Mill is a concern with this alternative. The only way to eliminate the U-turns associated with a barrier median would be to close the entrances thereby eliminating the need for the barrier median altogether. With the existing development, the elimination of the entrances would require bridging across Beargrass Creek on both sides of Shelbyville Road and providing access to the businesses on the south side through access easements from Tillman Road and providing access to the businesses on the north side through access easements from Christian Way. Access to businesses on the south side of Shelbyville Road from Tillman Road is not favored by the SAT. Connection of the existing businesses on the south side with the one way road around the bank on the southeast corner of Christian Way and Shelbyville Road could also be considered as an alternate exit from those businesses to Christian Way.

The potential for re-development of the area along the north side of Shelbyville Road from Christian Way to Whipps Mill presents an opportunity for significant improvements in the area. The development of a primary access point across from Christian Way providing access to this area would make it possible to eliminate all or most of the access points along the north side of Shelbyville Road. Furthermore, the potential for connectivity from the intersection of Shelbyville Road at Christian Way to North Whipps Mill, New LaGrange Road, and Lyndon Lane would be a

significant and necessary step in the development of a north-south route as an alternative to Hurstbourne Parkway. This connectivity should be accommodated in any development plans in the area including the vacant land along the west side of Whipps Mill north of Shelbyville Road. Hopefully, this connectivity can be made in a manner that eliminates the need for a signal at the intersection of Shelbyville Road and Whipps Mill Road thereby providing optimum signal spacing along Shelbyville Road.

The level of service and traffic progression in this area would be significantly improved if this connectivity can be made in a manner that allows for the elimination of the existing intersection of Shelbyville Road at Whipps Mill Road. If this intersection were eliminated, this location could be used as a secondary access point to the aforementioned re-developed area. The existing intersection at Shelbyville Road and Christian Way would become a larger intersection and will need improvement. Movements through two intersections and the additional volume on Shelbyville Road between them will cause greater delays than a single larger intersection. This is especially true if access to I-64 is provided from the extension of Bunsen Parkway and Christian Way or if Christian Way is connected to Lowe Road.

Shelbyville Road / Lyndon Lane

Signalization of Whipps Mill and Shelbyville Road would minimize the demand at Lyndon Lane and allow for improved signal timing. A southbound left turn lane on Lyndon Lane would also be a significant improvement. The benefit of a southbound left turn lane will be limited by the length of the left turn lane and its ability to accommodate the left turn queue without backing up into the through lane.

Shelbyville Road / Hurstbourne Parkway

A westbound right turn lane on Shelbyville Road at Hurstbourne Parkway was considered by the KYTC in their planned improvements to this intersection that are planned with the widening of Hurstbourne Parkway southbound to three lanes. This right turn lane was determined not to be feasible without acquisition of the building on the northeast corner. The cost of this acquisition for the benefit was deemed to be unjustified.

The widening of Hurstbourne Trace to serve as another signature entrance to the University of Louisville Shelby campus was recommended by a member of the SAT. A connection at this location is planned by the University of Louisville and is accommodated by the existing roadway. Based on the current plans, the existing roadway appears to be adequate to accommodate the anticipated traffic demand.

Improvements are planned at the intersection of Shelbyville Road and Hurstbourne Parkway with the widening of southbound Hurstbourne Parkway in the KYTC six year plan. These improvements will improve the operation of the intersection and are recommended as planned.

Despite these improvements, the intersection will not meet the expected demand in 2030. Therefore, several options were evaluated and considered to meet that demand. Beyond adding additional lanes, the first approach to significantly improve the capacity of an intersection is to restrict left turn movements. There are several approaches to accommodate those left turns in an alternative manner. The first approach considered is referred to as “Michigan U-Turns” which require left turning traffic to continue straight through the intersection, make a U-turn, come back to the intersection, and turn right. This method requires wide medians with U-turn lanes away from access points, conditions which do not currently exist at this intersection. The second approach considered is referred to as “Jug-Handles” which require left turning traffic to continue straight through the intersection, exit the roadway to the right to turn around, make an unsignalized left turn across the mainline, come back to the intersection, and turn right. This method requires significant right of way which is also not available at this intersection.

The third approach is the utilization of adjacent streets as alternate routes for left turning traffic. At this location the most suitable adjacent streets are Whittington Parkway and the proposed roadways through Shelby Campus. The northbound left turn could turn left onto Whittington Parkway from Hurstbourne Parkway and left again onto Shelbyville Road. The westbound left turn could continue through the Hurstbourne Parkway intersection and turn left onto Whittington Parkway from Shelbyville Road and then right onto Hurstbourne Parkway. The southbound left turn could turn right onto the Shelby Campus roadway north of Shelbyville Road and then turn left onto Shelbyville Road and go through the Hurstbourne Parkway intersection. The eastbound left turn could turn left onto the Shelby Campus roadway in advance of Hurstbourne Parkway and then turn left onto Hurstbourne Parkway. The travel distances of the northbound and eastbound left turns will actually decrease and the travel distances of the southbound and westbound left turns will increase 2,000 feet or less. This will have a significant impact on Whittington Parkway and the Shelby Campus roadway by increasing traffic volumes by 900-1000 vph. This will also have a significant impact on the intersection of Whittington Parkway and Shelbyville Road and require dual lefts eastbound, southbound, and westbound; a dual right southbound would be required, and a triple left northbound to get a LOS E during the PM peak hour in 2030.

Alternative geometric designs were also considered for this intersection. The first alternative considered was a roundabout. According to the FHWA’s publication “Roundabouts: An Informational Guide” Exhibit 4-4, the demand volumes at this intersection exceed the capacity of a roundabout. Pedestrian safety is also a concern with high volumes at a roundabout.

The second alternative considered is referred to as a Continuous Flow Intersection (CFI). A CFI is an intersection design that is new to the United States and is based on the principle of moving the left turn conflict from the intersection. With a CFI the left turning vehicles cross over the oncoming traffic at a small signalized intersection before reaching the main signalized intersection. The main signal and the signals on each approach are spaced and coordinated to allow the left turning traffic to occur at the main intersection without stopping again after crossing oncoming traffic. This intersection allows all of the northbound and southbound movements to proceed simultaneously and all of the eastbound and westbound movements to proceed simultaneously. Using the medians, which are needed to separate the opposing traffic, as pedestrian refuge islands, this type of an intersection is very pedestrian friendly. The right of way requirements are approximately 40’ wider than a conventional signalized intersection. For example, 146’ is the minimum right of way required to accommodate the following:

- 10’ medians between all opposing movements
- 1 side street right turn lane
- 2 left turn lanes
- 2 opposing through lanes
- 2 through lanes
- 1 right turn lane
- 5’ sidewalks 5’ from traffic

This example may require the following:

- On the northbound Hurstbourne Parkway approach
  - a retaining wall along the parking lot on the west side
  - access management on the east side
- On the eastbound Shelbyville Road approach
  - acquisition of one row of parking from the Z Salon
  - a retaining wall along the Hurstbourne Corner shopping center parking
  - revision or closure of the Hurstbourne Corner entrance
- On the southbound Hurstbourne Parkway approach
  - acquisition of one row of parking on the west side (which is proposed to be acquired with the KYTC improvements)
  - acquisition of all the parking on the east side
  - acquisition of Starbucks
- On the eastbound Shelbyville Road approach
  - acquisition of Starbucks
  - acquisition of Speedway
  - acquisition of all the storefront parking on the south side east of Speedway (Wilder Electronics, India Palace)

Figure 11 shows an example of a CFI overlaid on the intersection of Shelbyville Road and Hurstbourne Parkway. Further study is needed to definitively determine the feasibility of construction and operation of a CFI at this location.

Single point urban interchange (SPUI) designs were also considered. SPUIs are grade separated interchanges that have a relatively tight right of way. At a two level SPUI, the mainline through movements are grade separated so they do not have to stop. The secondary street through movements and all of the left turn movements are controlled by a single signal. (An example of a SPUI is the I-264 (Watterson Expressway) interchange at Bardstown Road.) The right turn movements can be controlled with the signal, yield or stop sign controlled, or free flowing ramps with acceleration lanes. A three level SPUI is the same as a two level except that all of the through movements are grade separated so they do not have to stop. These alternatives are not very pedestrian friendly. The cost of these alternatives would be significant due to the cost of the structures involved and the substantial property acquisition that would be required. For the preservation of the community character, these alternatives are not favored by the SAT.

The LOS associated with each of these alternatives for the intersection of Shelbyville Road and Hurstbourne Parkway is shown in **Table 17**. The LOS shown is based on Shelbyville Road being six lanes and the volumes associated with that scenario.

TABLE 17: Alternative Intersection Level of Service Comparison

LOS		2030
DO NOTHING	A.M.	F
	P.M.	F
LEFT TURN RESTRICTION	A.M.	D
	P.M.	D
CFI	A.M.	B
	P.M.	C
2 LEVEL SPUI	A.M.	C
	P.M.	D
3 LEVEL SPUI	A.M.	B
	P.M.	B

LOS : Level Of Service

Shelbyville Road / Blue Ridge Road

The opposing left turns between Blue Ridge Road and Dorsey Lane are a safety concern. The low volume of westbound left turns to Blue Ridge Road coupled with the high volume of eastbound left turns to Dorsey Lane result in the eastbound left turning traffic prematurely entering the center turn lane which is striped for westbound left turning traffic. Complete closure of Blue Ridge Road was considered as an alternative to eliminate the opposing left turn conflict, however, a suitable and feasible alternative to access the Blue Ridge Manor subdivision and Trinity Presbyterian Church could not be found. Access to S. Dorsey Lane was not possible without residential property acquisition. Access to S. Dorsey Way was feasible, but required significant property acquisition from the Trinity Presbyterian Church and the Ten Thousand Office Park. An eastbound dual left at Dorsey Lane was also considered and feasible but the widening of Dorsey Lane required to accommodate the dual left was deemed to be unjustified. Side by side left turns were also deemed to be feasible but unjustified due to the required widening of Shelbyville Road and the low volume of left turns to Blue Ridge Road.

The restriction of westbound left turns to Blue Ridge Road with a non-traversable island, and a barrier divider between the through lanes and the eastbound right turn bay would eliminate the left turn conflict. Westbound traffic would be forced to use Moser Road or Cambridge Station to access the Blue Ridge Manor subdivision or the Trinity Presbyterian Church. This fairly inexpensive alternative is shown in **Figure 12**.

The relocation of the Blue Ridge Manor subdivision and Trinity Presbyterian Church entrance to a point approximately 225' west was also considered. This location, which lines up with the roadway along the east side of the church, provides enough distance from Dorsey Lane to accommodate the anticipated traffic queues from Dorsey Lane and eliminate the left turn conflict. This alternative would require closure of the rear access on Blue Ridge Road to prevent traffic from cutting through the church property. The existing frontage road used to access the church from Blue Ridge Road could still be used by the Blue Ridge Manor traffic to access Blue Ridge Road. This alternative requires extension of the existing eastbound right turn lane on Shelbyville Road. This alternative is more costly and may be perceived to be a bigger impact on the church property but it provides the most accessibility. Moving the entrance to the west side of the church to line up with Dorsey Way

was also considered, but determined to be unnecessary and had a larger negative impact. This alternative is shown in **Figure 13**.

Hurstbourne Parkway / Taylorsville Road

Widening Taylorsville Road to six lanes is in KIPDA's 2030 Horizon Plan in 2016. The continuation of six lanes on Hurstbourne Parkway through the intersection of Taylorsville Road was considered as part of the Taylorsville Road widening and is feasible inside the existing ROW. An additional lane would be required southbound. This lane should begin as far back as feasible and can be accommodated by creating a southbound right turn bay in its current location and realigning and widening into the existing median north and south of Taylorsville Road. The outside lanes could be dropped south of Taylorsville Road but should probably be continued to Stony Brook Drive. An additional northbound lane is also necessary south of Taylorsville Road and is feasible inside the existing right of way on the east side of Hurstbourne Parkway. Three northbound lanes exist north of Taylorsville. HCS+ analysis, based on KIPDA's baseline model volumes, indicates significant decreases in delay northbound in the AM peak hour and southbound in the PM peak hour. **Table 18** shows a LOS comparison for this alternative.

TABLE 18: Hurstbourne Parkway / Taylorsville Road LOS Comparison

Year	Peak Hour	Movement	Baseline (4 lane)		6 Lane Hurstbourne	
			LOS	Delay (s)	LOS	Delay (s)
2020	AM	NB Thru	F	287	F	182
		SB Thru	D	45	D	50
	PM	NB Thru	D	49	D	42
		SB Thru	F	250	E	73
2030	AM	NB Thru	F	493	F	246
		SB Thru	D	54	D	49
	PM	NB Thru	E	56	E	56
		SB Thru	F	358	F	262

I-64 / Bunsen Parkway

These alternatives are obviously contingent upon the construction of the Bunsen Parkway extension from Bowling Boulevard over I-264, through the Oxmoor Farm, over I-64, and to the existing Bunsen Parkway. A full interchange on I-64 between the I-264 and Hurstbourne Parkway interchanges would likely require collector distributor roads through those two interchanges due to their proximity. A collector distributor road separates the through traffic from the delay associated with the merging, diverging, and weaving of the traffic entering and exiting the interchanges which it serves. This collector distributor road would require modification of the ramps at I-264 and Hurstbourne Parkway after the planned improvements. The additional lanes necessary for this collector distributor road will significantly increase the capacity of I-64 in this area, and remove the bottleneck that currently exists westbound at the Oxmoor Farm overpass. The re-striping of eastbound I-64 under the Oxmoor Farm overpass this year provided four continuous lanes eastbound and has already increased the capacity in this area.

An interchange serving the area to the north of I-64 only with a connection to the Bunsen Parkway / Christian Way intersection in the Oxmoor Farm development was evaluated. An interchange serving both the north and south sides of I-64 with a connection to Lowe Road as well was also evaluated. This connection between Christian Way and Lowe Road would serve as a north-south route alternative to Hurstbourne Parkway attracting approximately 28,000 trips between the interchange and Lowe Road. This connection would require the acquisition of right of way through the Oxmoor Golf Club and may require the improvement and widening of Lowe Road to four lanes to Taylorsville Road and possibly Browns Lane depending on trip distribution. There is undeveloped land south of Taylorsville Road that could accommodate future extension of this corridor. The connection between Christian Way and Lowe Road could be made with or without an interchange on I-64.

The 2030 projected traffic for I-64 is approximately 63,000 vehicles per day in each direction. The installation of an interchange at this location and the associated collector distributor road would increase the capacity of I-64 in this area significantly. This increase in capacity will attract approximately 8,000 more vehicles per day in each direction. The volume of traffic on the mainline through lanes would be approximately 30,000 vehicles per day and would require two lanes in each direction. The volume of traffic on the collector distributor roads will actually be higher than the mainline at approximately 40,000 vehicles per day and would require at least three lanes. This collector distributor road traffic volume is significant enough to cause some concern about the functionality of this alternative.

The benefits of this interchange in the study area include a reduction in traffic of approximate 7,000 vehicles per day in each direction on Shelbyville Road, and the mitigation of some of the impacts of the Oxmoor Farm and Shelby Campus developments. With the proper connections, this interchange would also provide an alternative means of ingress and egress for the City of Hurstbourne. The impacts of the connection from Lowe Road to this interchange are more likely to be seen outside of the study area on Taylorsville Road, Browns Lane, Dutchmans Lane, and Breckenridge Lane in addition to Lowe Road itself. **Figure 14** is a sketch illustrating a full interchange to a Christian Way / Lowe Road connection with collector distributor roads along I-64. A more extensive scoping and interchange justification study is needed to more accurately determine the traffic impacts, geometrics, and functionality of the collector distributor road.

If a full interchange at this location is not feasible, another possible improvement for this area could be the addition of an eastbound off ramp to the proposed Bunsen Parkway extension. This off ramp alone could minimize traffic congestion on Hurstbourne Parkway south of I-64 by providing an alternative access to Taylorsville Road via Blowing Tree or to Bluegrass Industrial Park via Bunsen Parkway. This off ramp could also be the beginning of a partial interchange if an on ramp were provided to I-64 westbound from the Bunsen Parkway extension. These ramps may be feasible without the need for a collector distributor road since the location of the planned Bunsen Parkway overpass is farther away from the I-264 interchange. **Figure 15** is a sketch illustrating a partial interchange to the Bunsen Parkway overpass. Partial interchanges on interstate highways are not favored by the Federal Highway Administration. As with the full interchange, this option needs a more extensive scoping and interchange justification study to determine traffic impacts, geometrics, and feasibility.

TABLE 19: Traffic Calming Techniques

		MEASURE	ADVANTAGES	DISADVANTAGES	SAFETY IMPROVEMENT	SPEED REDUCTION	TRAFFIC REDUCTION	FUEL CONSUMPTION	POLLUTION	EMERGENCY SERVICES	INSTALLATION COSTS
Education	1	**Neighborhood Education**	*Relatively effective, and relatively inexpensive *Involves & empowers citizens *Works well with other mitigation tools	* Not likely to be as effective on non-neighborhood traffic *Can be expensive & or time consuming * May take time to be effective	Possible	Possible	No	No Effect	No Effect	No Effect	1,000 - 5,000 each
Enforcement	2	**Traditional Enforcement**	*Good temporary public relations tool *Helpful in school zones *Serves to inform that speeding is undesirable & has consequences	* Effect is not permanent *Disrupts efficient traffic flow on high volume streets * Enforcement is an expensive tool	Yes (when present)	Yes (when present)	No	No Effect	No Effect	No Effect	90,000 per year for officer & equipment
Enforcement	3	**Photo Radar Speed Enforcement**	*Speed enforcement with minimal staffing *May have widespread effectiveness due to mobile nature, difficulty to anticipate, and widespread application	*Public perceptions related to invasion of privacy *Vehicle owners may receive the ticket when they were not driving *Legal issues need to be addressed before implementation	Possible	Yes	No	No Effect	No Effect	No Effect	Moderate cost to implement system. May be low cost if contracted.
Monitoring	4	**Neighborhood Monitoring**	*May have long-term effects as neighbors become aware of who speeds *Speeds may be reduced during short intervals. *Neighbors feel they are part of the solution	*Not an enforcement tool *Not effective on multi-lane roadways with significant volumes	Possible	Possible	No	No Effect	No Effect	No Effect	5,000-10,000
Monitoring	5	**Radar Speed Monitoring Trailer**	* Educational tool *Very good public relations tool *Effective for temporary speed reduction needs *Useful in school & construction zones (spot speed reduction)	*Requires periodic enforcement *Effective for limited duration *Not self enforcing *Unit moves frequently, requires personnel	Possible	Yes	No	No Effect	No Effect	No Effect	$10,000- $15,000
Signing / Striping	6	**Traffic Calming Sign**	*Informs & alerts of oncoming devices *Provides context for enforcement efforts *Improves safety & effectiveness of device	*More signage on the street, sometimes considered unsightly *Not self enforcing *Requires on-going police enforcement	Possible	No	Not alone	No Effect	No Effect	No Effect	50 - 75 per sign
Signing / Striping	7	**Restricted Movement Signing**	*Redirects traffic to main streets *Reduces cut-through traffic *Addresses time-of-day problems	*Not self enforcing *May increase trip length for some drivers *More visual pollution from signs in the neighborhood	Possible	Possible	No	No Effect	No Effect	No Effect	Moderate
Signing / Striping	8	**Commercial Vehicle Restrictions**	*Restricts commercial vehicles using street *Reduces traffic noise, speed, & volumes	*Requires additional maintenance of signs *Requires enforcement to be effective	Yes	No	Yes	No Effect	No Effect	No Effect	50 - 75 per sign
Signing / Striping	9	**Road Striping**	*Inexpensive *May reduce speed *Edge treatment increases safety of cyclists & pedestrians *Low maintenance	*May not be as save as other measures	Possible	Possible	No	No Effect	No Effect	No Effect	1,000 - 5,000
Signing / Striping	10	**Higher Visibility Crosswalks**	*Indicates to pedestrian an acceptable or preferred crossing location *More visible to drivers	*Pedestrians may place too high a level of reliance on the ability of a crosswalk to control drivers *More maintenance required than with traditional sidewalks	Yes	Possible	No	No Effect	No Effect	No Effect	1,000 -5,000
Pavement Treatments	11	**Rumble Strips**	*Relatively inexpensive *Creates driver awareness *May reduce speeds	*High maintenance *May impact bicyclists *May be ineffective reducing speeds *Noisy by design not recommended for neighborhood settings	Possible	Possible	No	No Effect	No Effect	No Effect	1,000 -5,000
Pavement Treatments	12	**Textured Pavement**	*May be aesthetically pleasing *May be used to define pedestrian crossing	*Increased maintenance	Possible	Possible	No	No Effect	No Effect	Possible Problems	5,000 - 10,000 per location

TABLE 19: Traffic Calming Techniques (cont.)

		MEASURE	ADVANTAGES	DISADVANTAGES	SAFETY IMPROVEMENT	SPEED REDUCTION	TRAFFIC REDUCTION	FUEL CONSUMPTION	POLLUTION	EMERGENCY SERVICES	INSTALLATION COSTS
Vertical Speed Reduction	*13*	**Speed Humps**	*Reduces vehicle speeds in the vicinity of the hump without increasing crashes. Better if used in a series at 300' to 500' spacing. *Self enforcing *Relatively inexpensive *Requires minimum maintenance; pavement markings must be maintained *Minimal impact on snow removal	*May create noise particularly if there are loose items in the vehicle or trailer *If not properly designed, drivers may try to skirt around to avoid impact *May be a problem for emergency vehicles *May impact drainage *Drivers may speed up between humps *May increase volumes on other streets *Difficulty to properly construct *Requires signage that may be considered unsightly	Yes	No	Possible	Small Increase	Small Increase	Possible Problems	$3,000 - $5,000 each
	14	**Raised Crosswalks**	*Effective speed control at the installation *Effective pedestrian amenity *May be designated to be aesthetically pleasing *Increases pedestrian visibility in the crosswalk *Clearly designates the crosswalks *Requires minimum maintenance; pavement markings must be maintained	*May create noise *May be a problem for emergency vehicles *May Impact drainage *Drivers may speed up between humps *May increase volumes on other streets *Requires signage that may be considered unsightly	Yes	Yes	Possible	Small Increase	Small Increase	Possible Problems	$3,000 - $5,000 each
	15	**Raised Intersection**	*Slows vehicle in the most critical area and therefore helps to make conflict avoidance easier *Highlights intersection *Excellent pedestrian safety treatment *Aesthetically pleasing if well designed *Effective speed reduction, better for emergency vehicles than speed humps	*Increases difficulty of making a turn *Increased maintenance *Requires adequate signage & driver education	Yes	Yes	Possible	Small Increase	Small Increase	Possible Problems	$50,000 - $100,000 each
Gateway Treatments	*16*	**Gateway Treatment**	*Positive indication of a change in environment from arterial road to residential street *Reduces entry speed *Reduces pedestrian crossing distances *On very wide streets provides space for landscaping the median *Helps give neighborhood identity *Allows neighborhood creativity & participation in design	*Maintenance responsibility *Must be funded by residents	Possible	Possible	Possible	No Effect	No Effect	Possible Problems	$10,000 - $20,000
	17	**Entry Island**	*Notifies motorists of change in roadway character *Helps slow traffic *Opportunity for landscaping and/or monumentation for aesthetic improvements	*Need for maintenance (and irrigation) *May necessitate removal of parking	Possible	Yes	Possible	No Effect	No Effect	Possible Problems	Low to medium cost to install, landscape and maintain
	19	**Traffic Circles**	*Reduces speed at intersection approach *Provides space for landscaping *Cheaper to maintain than a traffic signal *Breaks up sight-lines on straight streets *Does not restrict movements, makes them more difficult	*May require additional signage *Initial safety issues as drivers adjust *Maintenance responsibility if landscaped *Relatively expensive if curb extensions are required *On streets with bicycle facilities, bikes must merge with traffic around circle	Yes	Yes	Possible	Small Increase	Small Increase	Possible Problems	$5,000- $10,000

TABLE 19: Traffic Calming Techniques (cont.)

		MEASURE	ADVANTAGES	DISADVANTAGES	SAFETY IMPROVEMENT	SPEED REDUCTION	TRAFFIC REDUCTION	FUEL CONSUMPTION	POLLUTION	EMERGENCY SERVICES	INSTALLATION COSTS
Intersection Treatements	*20*	**Roundabouts**	*Reduces crashes by 50% to 90% when compared to 2-way,4-waystop signs, & traffic signals by reducing the number of conflict points *Reduces speed at intersection approach *Longer speed reduction influence zones *Provides space for landscaping *Cheaper to maintain than a traffic signal *Effective at multi-leg intersections *Provides equal access to intersections for all drivers *Provides a good environment for cyclists *Does not restrict movements, makes them more difficult	*May be restrictive for larger vehicles if designed to a low speed. Providing mountable apron minimizes this limitation *May require additional signage and lighting *If left turns by large vehicles are accommodated then right of way may have to be purchased *Initial safety issues as drivers adjust *May increase volumes on adjacent streets *Maintenance responsibility if landscaped	Yes	Yes	Possible	Small Increase	Small Increase	Possible Problems	$10,000 - $30,000
	18	**Curb Radius Reduction**	*Shortens the pedestrian crossing distance *Improves visibility between pedestrians & motorists *Reduces motorists turning speed	*Difficult for trucks to enter roadway *May be perceived as inconvenience by neighbors & unwarranted restriction by the general public	Possible	Possible	No	No Effect	No Effect	Possible Problems	$5,000 - $10,000
Lateral Shifts	*21*	**Deviations / Chicanes**	*Imposes minimal inconveniences to local traffic *Pedestrians have a reduced crossing distance *Provides a large area for landscaping *Provides a greater visual obstruction *Cost of device is limited by length A very effective method of changing the initial impression of the street. If done correctly drivers will not be able to see through. Appears as a road closure *Accepted by public as speed control device *Aesthetically pleasing *Reduces speed without significantly impacting emergency response	*Increases the area of landscaping to be maintained by residents *Cost is greater than many other devices, therefore better to be installed in conjunction with street reconstruction or initial design *May create opportunities for head-on conflicts on narrow streets	Yes	Yes	Possible	Small Increase	Small Increase	Possible Problems	$50,000 - $100,000
	22	**Angled Slow Points**	*Reduces vehicle speed *More effective when used in a series *Imposes minimal inconveniences to local traffic *Pedestrians have a reduced crossing distance *Provides space for landscaping *Provides a visual obstruction	*Landscaping needs to be controlled to ensure visibility is reduced *Contrary to driver expectation of unobstructed flow *Can be hazardous for drivers and cyclist if not designed & maintained properly *Confrontation between opposing drivers arriving simultaneously may create problems *Double lane application is less effective in controlling speeds than single lane because drivers can create a straighter through movement by driving over centerline *Increases area of landscaping to be maintained by residents	Yes	Yes	Possible	Small Increase	Small Increase	Possible Problems	

TABLE 19: Traffic Calming Techniques (cont.)

		MEASURE	ADVANTAGES	DISADVANTAGES	SAFETY IMPROVEMENT	SPEED REDUCTION	TRAFFIC REDUCTION	FUEL CONSUMPTION	POLLUTION	EMERGENCY SERVICES	INSTALLATION COSTS
Lane Narrowing	*23*	**Lane Narrowing**	*Minor inconveniences to drivers *Minimal inconveniences to local traffic *Good for pedestrians due to shorter crossing distance *Provides space for landscaping *Slows traffic without seriously affecting emergency response time *Effective when used in a series *Single lane narrowing reduces vehicle speed & through traffic	*Double lane narrowing not very effective at reducing speeds or diverting through traffic *Only partially effective as a visual obstruction *Unfriendly to cyclists unless designed to accommodate them *Conflict between opposing drivers arriving simultaneously could create problems	Possible	Yes	Possible	Small Increase	Small Increase	Possible Problems	$10,000 - $30,000
	24	**Neckdowns**	*May be aesthetically pleasing, if landscaped *Good for pedestrians due to shorter crossing distance *Can be used in multiple applications or on a single segment of roadway	*Unfriendly to cyclists unless designed to accommodate them *Landscaping may cause sight line problems *Increased maintenance if landscaped	Possible	Yes	Possible	Small Increase	Small Increase	Possible Problems	$10,000 - $ 20,000
	25	**Chokers**	*Pedestrian crossing distance reduced *Narrowed roadway section may contribute to vehicular speed reduction *Breaks up drivers' line-of-sight	*May create hazard for bicyclists who are less visible to cross street and turning traffic	Possible	Yes	Possible	Small Increase	Small Increase	Possible Problems	Moderate
Movement Restrictions	*26*	**Realigned Intersection (realigns T-intersections making through mvmt a turning mvmt)**	*Provides landscaping opportunities *Discourages traffic from continuing through a neighborhood *Breaks up sight-lines on straight streets *Slows traffic as it enters a neighborhood	*May redirect traffic to another local street *Fairly expensive *Can cause confusion regarding priority movements	Yes	Yes	Possible	Small Increase	Small Increase	Possible Problems	Fairly Expensive
	27	**Forced Turn Barriers/ Diverters**	*Changes driving patters *May reduce cut through traffic *May be attractive if landscaped	*May increase trip length for some drivers *Can be aesthetically unattractive if not landscaped *May increase response times for emergency vehicles *Maintenance responsibility if landscaped	Possible	Possible	Yes	Small Increase	Small Increase	Possible Problems	$5,000 - $15,000
Barriers	*28*	**Mid-Block Median**	*Provides a refuge for pedestrians & cyclists *May improve streetscape if landscaped *Provides a barrier between lanes of traffic *May produce a limited reduction in vehicle speeds	*May reduce sight lines if over landscaped *Increased maintenance *Impairs access and may encourage wrong-way drivers	Possible	No	Possible	No Effect	No Effect	Possible Problems	$50,000-$100,000
	29	**Traversable Barriers**	*Reduces or eliminates cut through traffic	*May inconvenience residents gaining access to their properties *Depending on design, may be subject to violation by unauthorized vehicles *Altered traffic patterns may increase trip length	Yes	Yes	Yes	Small Increase	Small Increase	Possible Problems	Moderate
	30	**Diagonal Road Closures**	*Eliminates though traffic *Provides area for landscaping *Reduces traffic conflict points *Increases pedestrian safety *Can include bicycle path connection	*May inconvenience residents gaining access to their properties *May inhibit access by emergency vehicles *May divert through traffic to other local streets *Altered traffic patterns may increase trip length	Yes	Yes	Yes	Small Increase	Small Increase	Possible Problems	Moderate to high

TABLE 19: Traffic Calming Techniques (cont.)

		MEASURE	ADVANTAGES	DISADVANTAGES	SAFETY IMPROVEMENT	SPEED REDUCTION	TRAFFIC REDUCTION	FUEL CONSUMPTION	POLLUTION	EMERGENCY SERVICES	INSTALLATION COSTS
Closures	*31*	**Partial Street Closures**	*Reduces through traffic in one direction and possibly in the other *Allows two-way traffic in the remainder of the street *Good for pedestrians due to shorter crossing distance *Provides space for landscaping *Can be designed to provide two way access for bicycles	*Reduces access for residents *Emergency vehicles are only partially affected as they have to drive around partial closure with care *Compliance with semi-diverters is not 100% *May increase trip length for some residents *Maintenance responsibility if landscaped	Yes	Possible	Yes	Small Increase	Small Increase	Possible Problems	Moderate to high
	32	**One-Way Streets**	*Tends to be safer due to lack of friction from opposing traffic flow *Can facilitate traffic flow through an area *Can open up narrow streets for more resident parking *Increases pedestrian safety *Maintains reasonable access for emergency vehicles *Maze effect of one-way traffic can discourage through traffic	*Can lead to increased vehicle speeds *May result in longer strip lengths *May increase emergency response time *May increase volumes on other streets *Initial safety issues as drivers adjust	Yes	No	Possible	Small Increase	Small Increase	Possible Problems	$5,000 - $10,000
	33	**Street Closure / Cul De-Sac**	*Eliminates though traffic *Reduces speed of the remaining vehicles *Improves safety for all the street users *Pedestrian and bike access maintained	*Reduces emergency vehicle access *Reduces access for residents *May be perceived as inconvenience by neighbors & unwarranted restriction by the general public *May increase trip lengths *May increase volumes on other streets	Possible	Yes	Yes	Small Increase	Small Increase	Possible Problems	Moderate to high

FIGURE 6: Transit Circulator

FIGURE 7: Network of Bicycle and Pedestrian Facilities

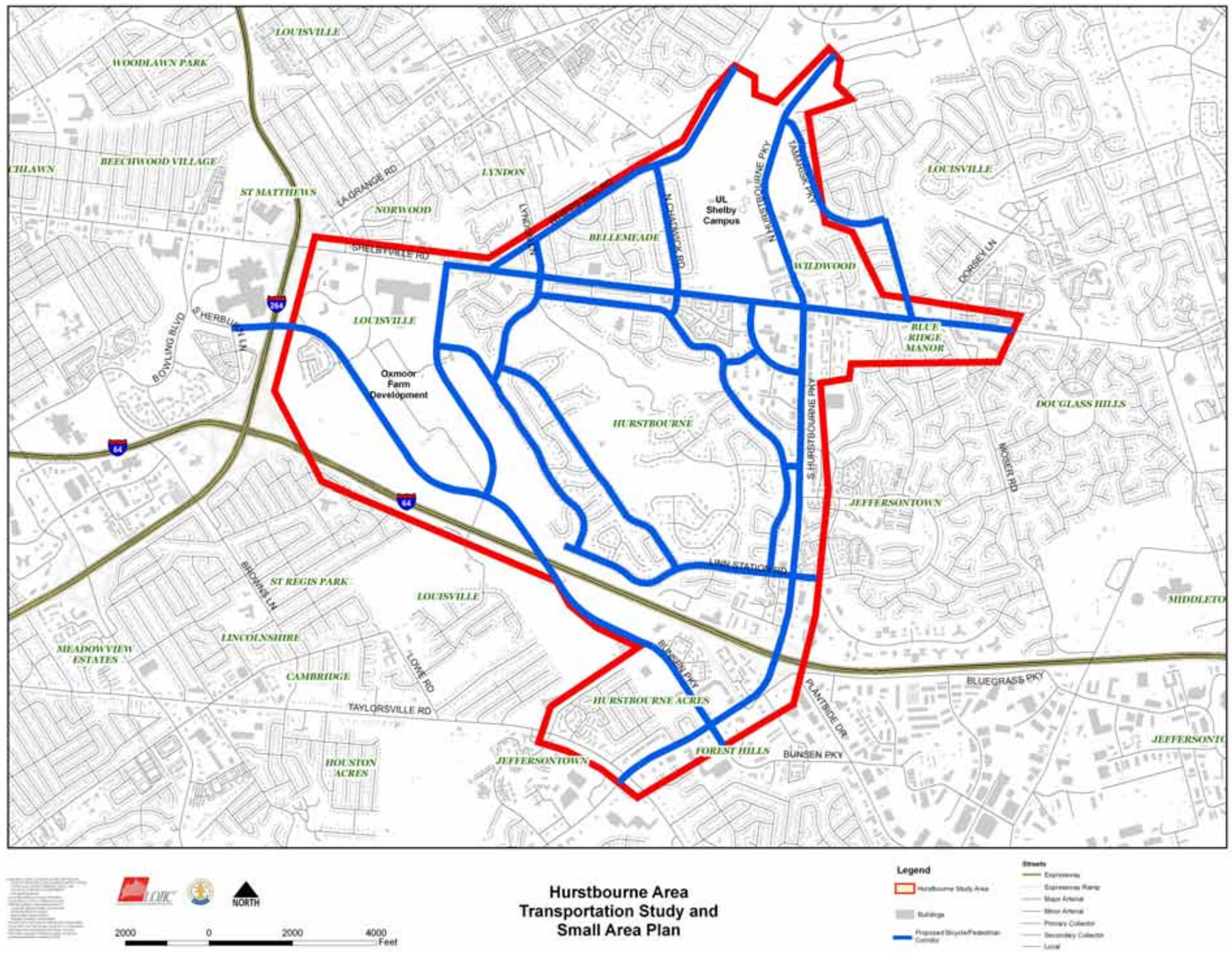

FIGURE 8: Existing Sidewalks in the City of Hurstbourne

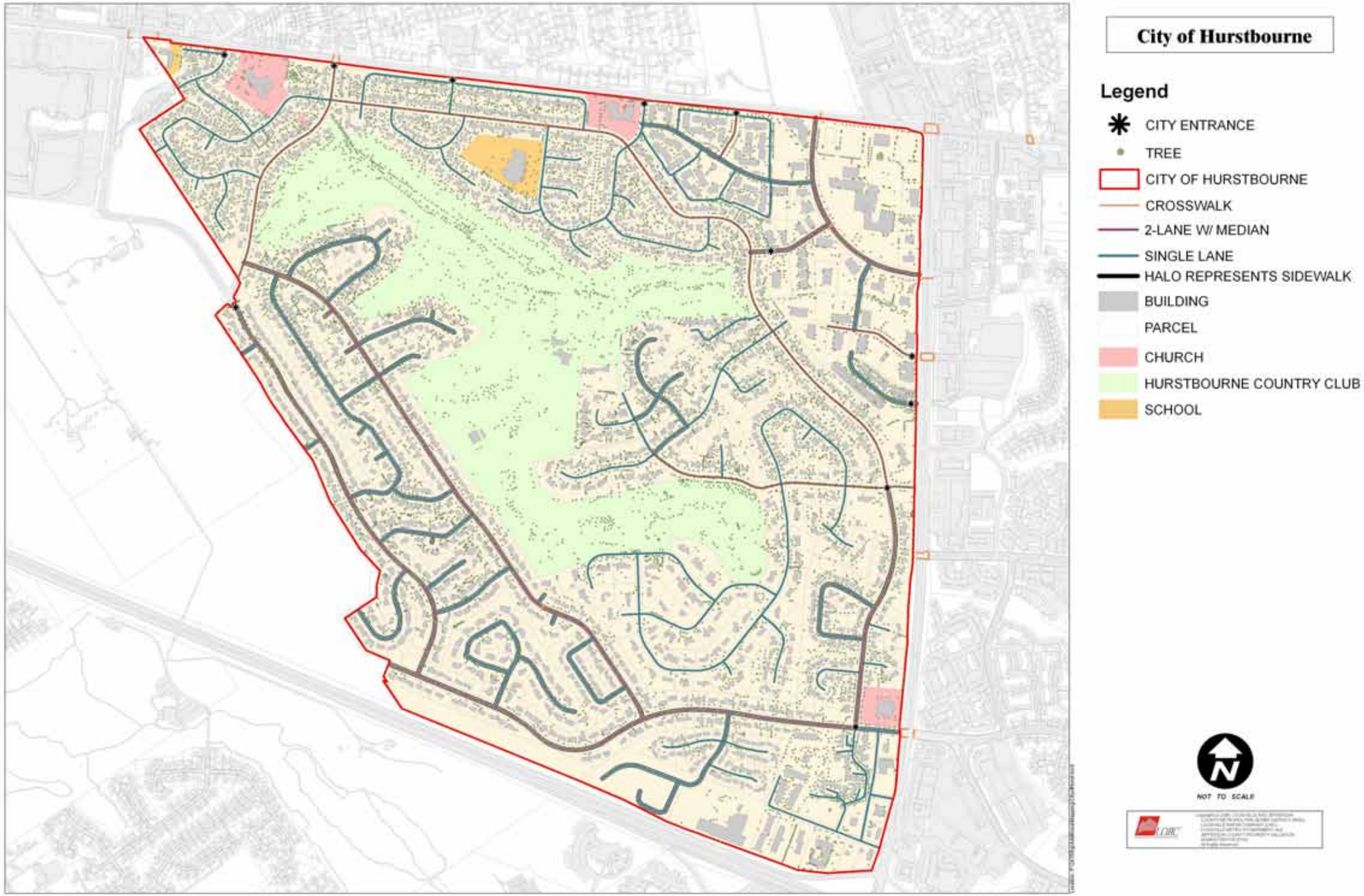

FIGURE 9: Alternative Routes

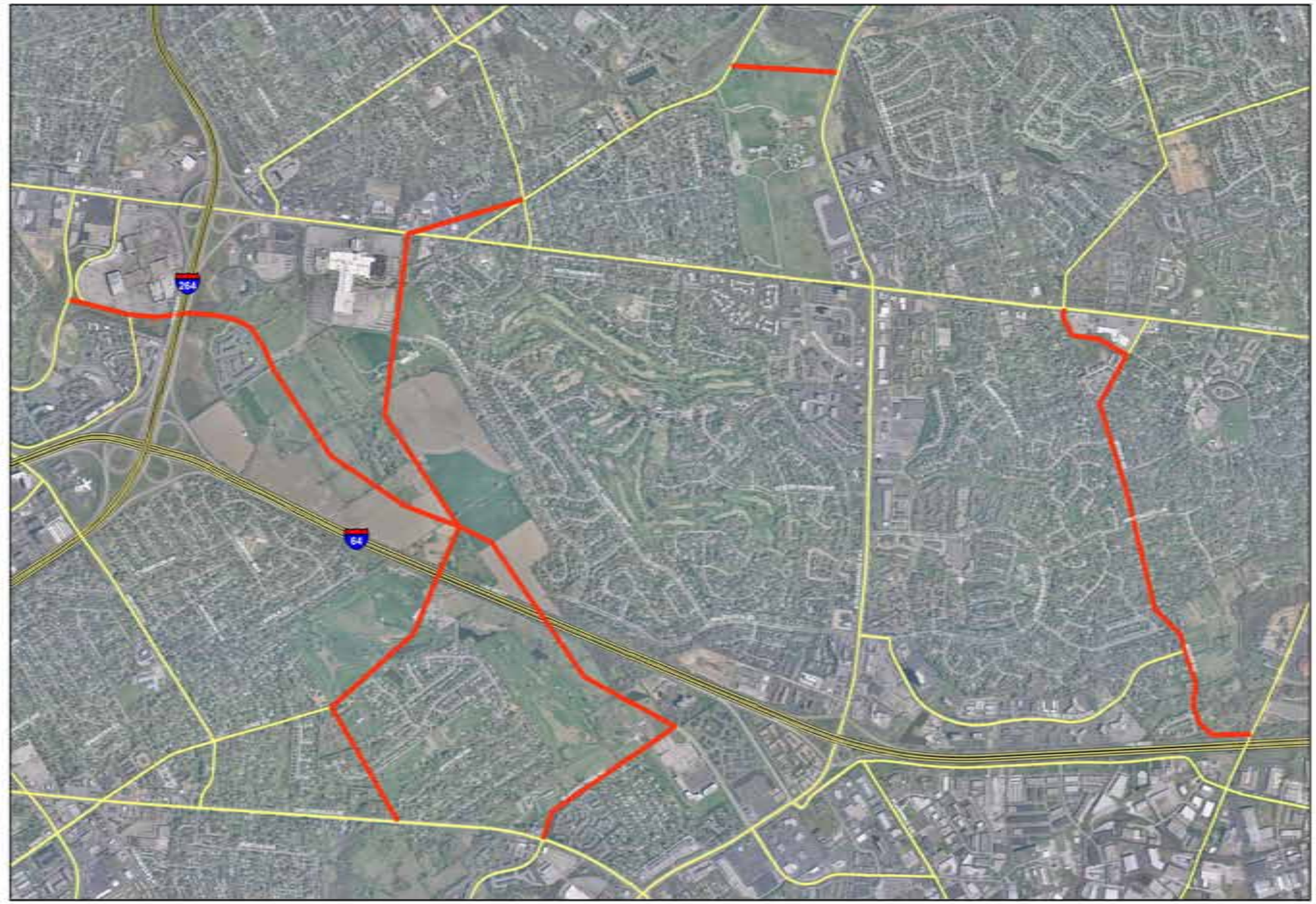

FIGURE 10: Old Dorsey Place Subdivision Connections

FIGURE 11: Continuous Flow Intersections at Shelbyville Road / Hurstbourne Parkway

FIGURE 12: Blue Ridge Manor Option A

FIGURE 13: Blue Ridge Manor Option B

FIGURE 14: Full Interchange

FIGURE 15: Partial Interchange

5.0 RECOMMENDATIONS

The transportation recommendations represent the culmination of extensive data collection, analysis and review by the transportation and planning consultant, project staff, and the Study Advisory Team. The recommendations are divided into the three general categories - reducing vehicular trips, traffic management, and increasing capacity. Some of the recommendations are broad-based and conceptual, identifying a direction for more detailed study and analysis. All of the recommendations, particularly those affecting future infrastructure improvements, should include a comprehensive public involvement component as part of the process.

Reducing Vehicular Trips

These recommendations are mostly planning policy and program based, centered on reducing automobile travel demands. These recommendations begin with the development of a Transportation Demand Management Program (TDM). A TDM program is a cooperative effort between public agencies and private employers which should include Louisville Jefferson County Metro, KIPDA, Greater Louisville Inc., Jeffersontown Chamber of Commerce and businesses in the Jeffersontown Industrial Park, Oxmoor Farm Trustees and future development on the Oxmoor Farm site, University of Louisville and future businesses in the Shelby Campus Development. A TDM program involves encouraging alternative work arrangements and alternatives to single-occupant vehicles through incentives and disincentives as described in Chapter 4. There are endless possibilities in a TDM program.

Planning and designing new roadways or roadway improvements as “Complete Streets” is recommended. Complete streets include provisions for bicycles (bike lanes), pedestrian (sidewalks) and transit facilities. These bike lanes and sidewalks are essential to developing a network of bicycle and pedestrian facilities throughout the study area as shown in **Figure 7**. In addition to making these provisions with roadway improvement projects, sidewalk and bike lane projects are recommended on the local neighborhood streets to complete the network to connect the residential areas to the arterials and to regional and local destinations. Portions of these networks may already exist but need ADA accessible ramps which could be improved with tactile (textured pavement) warnings.

Improvements to transit services in the area are also recommended. These improvements include benches and shelters at existing stops, additional park and ride lots, and connecting sidewalks. Pull off lanes at heavily used stops on busy roadways are also recommended. Transit centers that connect multiple modes of transportation, while providing services such as news stands, are recommended at major pedestrian trip generation locations along Hurstbourne Parkway and Shelbyville Road. A circulator route serving the commercial areas along Hurstbourne Parkway and Shelbyville Road as shown in **Figure 6** is also recommended. This circulator route could be implemented as a pilot project during the holiday shopping season, evaluating routes, stops and frequency.

Improvements to transit service should also include consideration of bus rapid transit (BRT) programs and technology. BRT is a mass transit alternative that includes the travel quality of rail transit with the route flexibility of buses. BRT uses intelligent transportation system technology combined with passenger amenities to shorten travel times and improve convenience. It is recommended that consideration be given to opportunities to phase BRT programs in over time and to implement pilot projects quickly using existing road infrastructure.

Traffic Management

The traffic management recommendations are also planning policy and program based, but they are centered on controlling traffic patterns and maintaining traffic flow. These recommendations begin with the development of a Transportation Systems Management Program (TSM) to improve traffic flow. Recommended improvements that should be considered as a part of this TSM include signal coordination, access management and intelligent transportation system technology. The access management recommendations, which consist of frontage roads, consolidating access points, raised medians and right-in/right-out access points, are shown on the Recommendation maps of the corridors in Chapter 7 of the Small Area Plan. Expansion of the TRIMARC monitoring and freeway management program to include the corridors of Shelbyville Road and Hurstbourne Parkway is recommended.

The following signal coordination is recommended for consideration by the KYTC:

- Coordination of the existing signals on Shelbyville Road at Whittington Parkway and Wildwood Lane with the Hurstbourne Parkway system
- Coordination of the existing signals on Shelbyville Road west of and including Lyndon Lane
- Coordination of Stony Brook Road at Taylorsville Road with Hurstbourne Parkway

Coordination of these signals should be requested for evaluation by KYTC central office. This request can be made through the KYTC District 5.

Diagrammatic signs are recommended for consideration westbound on Shelbyville Road and northbound on Oxmoor Lane to aid motorists in lane choice approaching the I-264 on ramp.

Development of Traffic Calming Plans

As mentioned, traffic management not only involves maintaining traffic flow on the arterials but also controlling traffic on the local streets. Connectivity between land uses is necessary to provide alternative routes and avoid unnecessary traffic on the arterials. With connectivity, may be the need for traffic calming to control the traffic to appropriate volume and speed. The study identified several local streets for consideration of traffic calming measures. These streets include Lyndon Lane, Nottingham Parkway, Leesgate Lane, Linn Station Road, Colonel Anderson Parkway, Oxmoor Woods Parkway, Chadwick Road and Bellemeade Road. It is recommended that traffic calming plans be developed with extensive public involvement and agreement from residents, neighborhood associations and public officials. It should be noted that this study is not recommending any closures or any other specific traffic calming techniques or locations. The traffic calming techniques and locations presented are conceptual and are suggested only for consideration based on comments received from the public and members of the SAT.

The first decision of a traffic calming plan should be to determine the goal to be achieved. Part of this decision should be the collection of data through monitoring and enforcement and the analysis of that data. After the goal is identified, suitable techniques are chosen to meet that goal. Some techniques are used to control the speed of traffic while others are used to control the volume of traffic and some may do both. A good traffic calming plan should use multiple techniques for diversification, but should be carefully planned to avoid arbitrary randomness. Traffic calming measures should be installed on an area-wide basis simultaneously to avoid transferring the problem from one local street to another. If the problem is found to be seasonal or during peak

hours, consideration should be given to techniques which can be implemented on a seasonal or hourly basis to minimize impact to the residents. Ultimately, the techniques used and the location of them should be agreed to by 75-80% of the affected property owners. The affected property owners include any residents that must regularly use the road as well as the residents along the road.

Volume Control Techniques Recommended for Consideration

1. Gateway treatments with plantings, narrower entrances and traffic circles
2. A program of random roadblocks
3. Strategically placed full and partial street diverters that increase the travel length and time through an area without preventing it completely. Automatic gates should be considered if budgets permit.

Speed Control Techniques Recommended for Consideration

1. Revised or reinforced signing (i.e. changeable message signs displaying "YOUR SPEED")(higher fines and photo enforcement would require legislation)
2. Raised cross walk on Nottingham at Oxfordshire Lane
3. Narrowing with shared lanes (bike, pedestrian, parking)
4. Lateral shifts or curves (chicanes) in the roadway with modification of existing medians
5. Narrowing at stop controlled intersections with wide lanes
6. Traffic circles in place of fully and partially stop-controlled intersections such as those listed on page 22.

Connectivity Between the City of Hurstbourne and the Oxmoor Farm Development

As previously stated, connectivity between land uses is necessary to provide alternative routes and avoid unnecessary traffic on the arterials. Therefore, elimination of the proposed connections between the City of Hurstbourne and the Oxmoor Farm Development is not recommended. The connectivity and direct access to the commercial uses in the proposed Oxmoor Farm development, Bunsen Parkway and potential connections with I-64 will improve traffic flow in and around the area by providing alternate routes. This is especially true for the residents in the City of Hurstbourne. In addition, eliminating these connections will not address the existing cut-through traffic concern. With that being said, all streets in the City of Hurstbourne are owned and maintained by the City of Hurstbourne; therefore, any traffic calming on those streets is ultimately a city decision involving legal matters. If any of these connections are eliminated, it is recommended that pedestrian and bicycle access still be allowed. If Stamford Drive is not connected with the proposed development, the existing three way stop at Oxmoor Woods Parkway should be made a one way stop.

Saint Margaret Mary School

It is recommended that St. Margaret Mary implement a student drop-off plan that strongly encourages increased use of drop-off locations at the rear of the school to avoid stacking onto Shelbyville Road. This could be as simple as adding personnel to the current plan that directs drivers to the rear when the front drop-off location is full. If this change is not effective, redirecting the traffic around the school in a clockwise direction should be considered.

Increasing Capacity

Most of the recommendations to increase capacity require infrastructure improvements which are mostly conceptual and will require a comprehensive public involvement process before implementation. Many of these recommendations are complex and dependent upon one another. The first recommendation is the development of alternative east-west and north-south routes that will increase capacity in the area while drawing traffic away from Shelbyville Road and Hurstbourne Parkway as shown in **Figure 9**. The planned Westport Road improvements including the interchange at I-264 and the Bunsen Parkway extension will be alternative east-west routes. Alternative north-south routes could include widening or improving Moser Road and extending Christian Way north of Shelbyville Road and south of I-64. For convenience and ease of reference, the rest of the recommendations are grouped geographically.

Bunsen Parkway Extension

Due to the value of the Bunsen Parkway extension, it is recommended that it be constructed in one phase, if financially feasible.

Construction of a new connection between Bunsen Parkway and Taylorsville Road along Blowing Tree Road is also recommended to improve north/south access. Design Blowing Tree Road as a frontage road rather than the primary route to protect existing residences and minimize access points.

University of Louisville Shelby Campus Roadway

The Kentucky Transportation Cabinet's Six Year Plan includes construction of roadways through the University of Louisville Shelby Campus connecting Whipps Mill Road, Hurstbourne Parkway, and Shelbyville Road in 2008. These connections are also included in the Shelby Campus Master Plan First Phase shown in **Figure 2**. These connections are recommended. Capacity improvements and traffic calming may be needed along Whipps Mill to accommodate the additional traffic and control the speed. Traffic calming along Whipps Mill should include the addition of bike lanes. Roundabouts may be appropriate and should be considered on Whipps Mill at Lyndon Lane and at the new road.

It is recommended that the Shelby Campus entrance on Shelbyville Road be realigned opposite Whittington Parkway as proposed by the Shelby Campus master plan to facilitate better traffic flow. It is recommended that the signal spacing along Hurstbourne Parkway be studied with a simulation model to determine the impact of and best location for additional signal(s) between Hurstbourne Trace and Ormsby Station. It is typically ideal to limit the number of signals along an arterial and provide connectivity to access those signals from nearby properties. However, the cost and feasibility of those connections can prevent this ideal scenario.

An update to the traffic impact study prepared by JWA/HMB dated November 1, 2004 is recommended to reflect the current development plans. This traffic study should be performed in accordance with Louisville Metro Planning and Design standards and with the input of Louisville Metro Planning and Design staff.

Hurstbourne Parkway / Tamarisk Parkway

A full signal warrant analysis and delay study by the Kentucky Transportation Cabinet is recommended at this location to determine if signal warrants other than the peak hour warrant (3) are met. Connections to Hurstbourne Parkway from Medina Way and Dorsey Way, which lead to signalized intersections, are recommended as alternatives to signalization of Tamarisk Parkway and Hurstbourne Parkway as shown in **Figure 10**. Other connections from Tamarisk Parkway would

require the acquisition of one or two residence. For connectivity and alternative route availability, two-way connections are recommended at as many locations as possible. These connections should only be made if a more detailed engineering study with public involvement determines that the existing infrastructure is or can be improved to be adequate.

Shelbyville Road – Christian Way to Whipps Mill

If the area along the north side of Shelbyville Road from Christian Way to Whipps Mill is redeveloped, it is recommended that the primary access be through the Christian Way intersection. It is further recommended that the re-development provide the opportunity for future connectivity to North Whipps Mill, New LaGrange Road and Lyndon Lane for the possibility of eliminating the need for the existing intersection of Whipps Mill and Shelbyville Road. With the recommended access management, it is also recommended that the KYTC remove the existing signal at 8-Mile Center. Until such time that the need for the existing intersection of Whipps Mill and Shelbyville Road can be eliminated, it is recommended that it be evaluated and considered for signalization by the Kentucky Transportation Cabinet. The existing signal at 8-Mile Center could be relocated to Whipps Mill.

Widening Shelbyville Road to three through lanes in each direction west of Whipps Mill is recommended to accommodate the traffic demand to/from Whipps Mill. While the widening of Shelbyville Road west of Whipps Mill will increase capacity, the levels of service will remain similar due to the increased traffic demand. For the preservation of community character, further widening of Shelbyville Road east of Whipps Mill is not preferred by the SAT and is not recommended. For the good of the entire area, multi-modal options such as bus rapid transit should be considered for the Shelbyville Road corridor.

If all of the aforementioned access management recommendations are not feasible within a reasonable time frame, a phased approach is recommended. A continuous barrier median from Christian Way to Whipps Mill with the removal of the 8-Mile Center signal and as much of the recommended access management as possible is recommended as part of this phased approach. The signalization of Whipps Mill and Shelbyville Road would still be recommended for evaluation with consideration given to the conflict between the U-turns and southbound right turn overlap at Whipps Mill.

Shelbyville Road / Hurstbourne Parkway

The widening of southbound Hurstbourne Parkway and the improvements planned at the intersection of Shelbyville Road and Hurstbourne Parkway are recommended as planned. However, future improvements are needed to accommodate the projected traffic demand. If increased capacity is desired at this intersection, a Continuous Flow Intersection is recommended for further evaluation to increase capacity and provide safe pedestrian accessibility with large landscaped refuge islands as shown in **Figure 11**. A VISSIM simulation model is required for analysis of this type of intersection. A cost/benefit analysis should also be included in this evaluation.

Shelbyville Road / Blue Ridge Road

Two alternatives are recommended for consideration at this location depending on cost and public opinion. The first alternative recommended for consideration is the restriction of westbound left turns to Blue Ridge Road with a barrier island between the through lanes and the eastbound right turn bay as shown in **Figure 12**. This is the least expensive alternative but has the greatest impact on the public.

The second alternative recommended for consideration is the relocation of the Blue Ridge Manor subdivision entrance, which is also used by the Trinity Presbyterian Church, approximately 225' west as shown in **Figure 13**. This alternative requires extension of the existing eastbound right turn lane on Shelbyville Road, closure of the church's rear access on Blue Ridge Road and utilization of the existing frontage to access Blue Ridge Road. This alternative is more costly but it provides the most accessibility.

Hurstbourne Parkway / Taylorsville Road

It is recommended that Hurstbourne Parkway be widened to include three through lanes in each direction from Taylorsville Road to Stony Brook Drive. This widening should be considered with the possible widening of Taylorsville Road in 2016 as recommended in KIPDA's 2030 Horizon Plan.

I-64 / Bunsen Parkway

The potential benefits of an interchange on I-64 between I-264 and Hursbourne Parkway warrant a more extensive scoping study to more accurately determine the traffic impacts, geometrics and functionality of an interchange in this area. A full interchange will likely require collector distributor roads through the interchanges of I-264 and Hurstbourne Parkway as shown in **Figure 14**. If a full interchange at this location is not feasible, a partial interchange with an eastbound off ramp to and a westbound on ramp from the proposed Bunsen Parkway extension should be considered as shown in **Figure 15**. Partial interchanges are not favored by the Federal Highway Administration; however, the possibility that these ramps may be feasible without the need for a collector distributor road warrants consideration. At this time, the recommendation for this alternative is a more extensive scoping and interchange justification study.

6.0 IMPLEMENTATION

As part of the Small Area Plan, the recommendations have been organized into one of three categories—those requiring changes to the Cornerstone 2020 Comprehensive Plan or the Metro Louisville Land Development Code; those that affect existing policy, establish new policy, or are programmatic in nature, and; recommendations for specific physical infrastructure improvements. For each recommendation, the plan identifies the entity or entities that have primary responsibility for implementation as well as the governmental agencies that would be involved in the implementation process. The plan also recommends a general time frame for implementing each recommendation. These timeframes, Short 2007-2009; Medium 2010-2015; Long >2015, reflect the fiscal and political realities of mobility infrastructure projects.

	Recommendation	Implementation Responsibility/Agency Involvement	Timeframe
	Cornerstone 2020/LDC		
M-1	Plan and design new roadways or roadway improvements as "Complete Streets" which include bicycle, pedestrian, and transit facilities to increase modal choice and reduce vehicular trips	KIPDA KYTC District #5 Louisville Metro Works Louisville Metro Planning & Design	Short
M-2	Develop or improve additional North-South (i.e., Moser Road, Christian Way) and East-West (i.e., Westport Road, Bunsen Parkway) routes to reduce volumes on Hurstbourne Parkway and Shelbyville Road (see M-22, M-23, M-28)	KYTC District #5 Louisville Metro Works Louisville Metro Planning & Design	Long
M-3	Investigate Bus Rapid Transit for both the Shelbyville and Hurstbourne corridors, considering opportunities to phase BRT programs in over time to implement pilot projects quickly using existing road infrastructure	TARC KIPDA KYTC District #5 Louisville Metro Works Louisville Metro Planning & Design	Short
M-4	Create a network of bicycle and pedestrian facilities throughout study area along priority corridors (see map)	KYTC District #5 Louisville Metro Works Louisville Metro Planning & Design City of Hurstbourne	Short-Long
M-5	Improve TARC facilities along all routes throughout study area	TARC	Short-Long
	Policy-Programmatic		
M-6	Develop a Transportation Systems Management Program (TSM) including signal coordination, expansion of TRIMARC, and access management	Louisville Metro Planning & Design (Transportation Planning) KYTC District #5 Louisville Metro Works	Short
M-7	Develop an area-wide Transportation Demand Management Program (TDM) to reduce peak hour trips	Louisville Metro KIPDA Jeffersontown Chamber of Commerce Area businesses Future Oxmoor Farm businesses Future Shelby Campus businesses	Short
M-8	Implement an Access Management Program to coordinate access management recommendations along the Hurstbourne and Shelbyville Road corridors	Kentucky Transportation Cabinet	Short
M-9	Create a TARC circulator route serving the commercial areas along Shelbyville Road and Hurstbourne Parkway, evaluating routes, stops, and frequency. This alternative might begin as a pilot project implemented during the holiday season.	TARC Area Business Associations	Short
M-10	Develop neighborhood traffic calming plans to determine need (speed control vs. volume control), obtain community input, and select traffic calming techniques and specific locations	City Councils/Neighborhood Associations Louisville Metro Works	Short
M-11	Begin a feasibility study for a Continuous Flow Intersection (CFI) at Shelbyville Road and Hurstbourne Parkway including a cost/benefit analysis	KYTC District #5	Medium

	Recommendation	Implementation Responsibility/Agency Involvement	Timeframe
M-12	Start a Scoping and Interchange Justification Study for an interchange on I-64 between I-264 and Hurstbourne Parkway considering both a full and partial interchange	KYTC District #5 Louisville Metro	Long
M-13	Expand the TRIMARC monitoring and freeway management program to include Shelbyville Road and Hurstbourne Parkway	TRIMARC KYTC District #5 Louisville Metro Works Louisville Metro Planning & Design	Long
M-14	St. Margaret Mary to implement a student drop-off plan that strongly encourages increased use of the rear drop-off location to avoid stacking traffic onto Shelbyville Road	St. Margaret Mary	Short
	Infrastructure		
M-15	Restrict westbound left turns to Blue Ridge Road or Relocate Blue Ridge Road to eliminate left turn conflicts between Blue Ridge Road and Dorsey Lane	KYTC District #5 Louisville Metro Works Louisville Metro Planning & Design Blue Ridge Manor	Short
M-16	Conduct a full signal warrant analysis and delay study on Hurstbourne Parkway at Tamarisk Parkway	KYTC District #5	Short
M-17	Form connections between Old Dorsey Place Subdivision and existing signalized intersections on Hurstbourne Parkway	KYTC District #5 Louisville Metro Works Louisville Metro Planning & Design Old Dorsey Place	Short
M-18	Evaluate a signal at Shelbyville Road and Whipps Mill (not needed if M-23 is implemented)	KYTC District #5 Louisville Metro Works Louisville Metro Planning & Design	Short
M-19	Remove 8-Mile Center signal or relocate to Whipps Mill if warranted by M-18	KYTC District #5	Short
M-20	Widen Shelbyville Road westbound to include three through lanes from Whipps Mill Road to Arterburn Drive (or from Christian Way if M-23 is implemented)	KYTC District #5 Louisville Metro Works Louisville Metro Planning & Design	Short
M-21	Widen Shelbyville Road eastbound to include three through lanes west of Whipps Mill Road (not needed if M-23 is implemented)	KYTC District #5 Louisville Metro Works Louisville Metro Planning & Design	Short
M-22	Extend Christian Way north, across Shelbyville Road, to make connections with New LaGrange Road, North Whipps Mill, and Lyndon Lane	KYTC District #5 Louisville Metro Works Louisville Metro Planning & Design	Short-Medium
M-23	Diagrammatic signing for I-264 ramps	KYTC District #5 Louisville Metro Works	Short
M-24	Construct planned Whipps Mill / Hurstbourne Parkway / Shelbyville Road connection through Shelby Campus	KYTC District #5 Louisville Metro Works Louisville Metro Planning & Design	Short (2008)

	Recommendation	Implementation Responsibility/Agency Involvement	Timeframe
M-25	Construct planned Shelbyville Road / Hurstbourne Parkway intersection improvements adding additional left turn lanes (south and eastbound approaches)	KYTC District #5 Louisville Metro Works Louisville Metro Planning & Design	Medium (2010)
M-26	Construct planned widening of southbound Hurstbourne Parkway to three through lanes from Shelbyville Road to Lynn Station Road	KYTC District #5 Louisville Metro Works Louisville Metro Planning & Design	Medium (2011)
M-27	Construct planned I-64 / Hurstbourne Parkway interchange improvements	KYTC District #5 Louisville Metro Works Louisville Metro Planning & Design	Medium (2012)
M-28	Construct Bunsen Parkway extension in one phase	KYTC District #5 Louisville Metro Works Louisville Metro Planning & Design	Medium (2012)
M-29	Construct a new connection between Bunsen Parkway and Taylorsville Road along Blowing Tree Road to improve north/south access. Design Blowing Tree Road as a frontage road rather than the primary route to protect existing residences and minimize access points	KYTC District #5 Louisville Metro Works Louisville Metro Planning & Design	Medium (2012)
M-30	Widen Hurstbourne Parkway to six lanes through Taylorsville Road	KYTC District #5 Louisville Metro Works Louisville Metro Planning & Design	Long
M-31	Locate and implement park and ride lots with transit centers at major pedestrian trip generation locations along Hurstbourne and Shelbyville Road	KYTC District #5 Louisville Metro Works Louisville Metro Planning & Design TARC	Long
M-32	Improve existing pedestrian facilities throughout the study area	KYTC District #5 Louisville Metro Works Louisville Metro Planning & Design	Short - Long

APPENDIX A

Public Involvement Meeting Sign-In Sheets/Comments

Hurstbourne Area Study Open House

Name	Address
Peggy Thieneman	9120 Blowing Tree Rd 40220
Mr & Mrs Anderson	10208 Blue Ridge Ct 40223
Mr & Mrs French	3507 Colyi Ln #3K, 40218
M. COURTLAND CLAYTON	8215 CAMBERLEY DRIVE 40222
CHRIS SPEDDING Bill	[redacted] SHELBYVILLE RD
David Shobe	425 S. Hubbards Lane #59
S. Clark Gass	KIPDA 11520 Commonwealth Dr 40299
Judi Sikes	8605 Holston Rd. 40222
Bill Sikes	" " " "
Richard Kline	9801 Winged Foot 40223
Ron Grimm	10206 Judith Ct 40223
Al "Mac" Hardesty	120 Blue Ridge Rd 40223
Linda Benz	10203 Judith CT 40223
DENNIS MARSHALL	10114 Cane Creek Rd 40223
MATT Ewovich	7415 Shepherd Cir #202 40222
Don Harlin	8105 Brixton RD 40222
Judy Flamm	8507 Whipps Mill Rd 40222
Jim Graham	1746 Shelby Cogers 40222
Dennis Meyer	9102 Devington Dr. 40222
Margaret Reinhart	8211 Camberley Dr. 40222
Karen + David Bucher	1306 OXMOOR WOODS PKWY. 40222
Jim CALPUSH	9905 MELISSA DR 40223
WAYNE WIEDMAN	202 FOREST PARK Rd 40223

Hurstbourne Area Study Open House

Name	Address
Bob English	8315 Salford Way 40222
Ed Dahlem	802 Nottingham Pkwy
Pat Hubbard	705 Colonel Anderson Pky 40222
Skip Walker	610 Dorsey Ln 40223
Betty Walker	"
Michael B Hamilton Jr.	8315 NOTTINGHAM PKWY 40222
[illegible]	9004 Willow Springs 40242
John Cash	10328 Keystone Tr. 40223
Deborah S Wright	9001 Hurstwood Ct 40222

Hurstbourne Area Study Open House

Name	Address
CAROL MINN	WHAS TV
JAMIE DEVORE	WHAS TV.
LYNN HARRELSON	8302 Cherkee Way
[illegible]	124 Blue Ridge Rd
Louis Twyman family	10513 KOVATS CT.
MARTY DUNN	9103 BLUEWING TR HURSTBOURNE ACRES
Lois Wagner	310 S. Lyndon Ln.
Julio Cosio	104 South Lyndon Ln.
Carlos [illegible]	10802 Livingston Gilbert CT
[illegible] Bendetto	800 Oxmoor Woods Pkwy 40222
Tom Bendetto	" " " " "
Julie Tam	WDRB-TV FOX 41
Robert [illegible]	9014 Lem Stokes Rd
Susan Clem	9014 Lem Stokes Rd
Tom & Theo Raifzer	10101 Canter Ridge, 40223
KEVIN OECHSLI	400 S. 1ST ST. 40202
KEN & BONNIE CHESTER	8908 NOTTINGHAM PKY 40222
Lyn & Tom Mattingly	117 N. Chadwick Rd 40223

Hurstbourne Area Study Open House

Name	Address
Parker & Sandy Curtis	403 South Lyndon Ln.
Richard Pontbriand	8801 Charing Cross Rd
VERNON COULTER	8508 CHEFFIELD DR
Mark Tucker	217 S. Lyndon Lane
Dave Richardson	WHAS-TV
Aaron Wick	WHAS TV
MARK FRENCH	908 Exmoor Ave 40223
Cathy Robertson	2002 Baldom Dr 40242

Hurstbourne Area Study Open House

Name	Address
Andrea Ward	10118 Cave Creek Rd Louisville 40223
Lori Burks	[illegible] Marlboro 40222
John Hedges	10208 Wood Knoll Rd.
WILLIAM D. FOWLER	10213 HARTLEY DRIVE 40223
AL PEPPER	405 FOREST PARK RD 40223
EARL HUBBUCH	705 Colonel ANDERSON Pkwy 40222
DAVID FRANCK	710 Nottingham Pkwy 40222
* Cheryl Franck	710 Nottingham Pkwy 40222
DON MUPPLER	202 S Lyndon LN 40222
Furman Wallace	904 Col Anderson Pky 40222
KEITH DEAVERS	1810 WICKHAM WAY 40223
Ron Schneider	3619 Johnston Way 40220
10 [illegible]	
18 [illegible]	

Louisville Metro
Planning and Design Services

District 18 Councilwoman
Julie Raque Adams

Hurstbourne Area Transportation Study and Small Area Plan

Open House #1

Founders Union Hall
2nd Floor, Room 218A
University of Louisville
Shelby Campus
9001 Shelbyville Road
Louisville, Kentucky 40222

November 1, 2005
6:00 PM to 8:00 PM

GRESHAM SMITH AND PARTNERS

Hurstbourne Area
Transportation Study and Small Area Plan

Ladies and Gentlemen:

Welcome to Open House #1 for the **Hurstbourne Area Transportation Study and Small Area Plan.** The project is in the very early stages. The purpose of the Open House is to receive your input and share information available to this point. Currently, we are gathering public input on area transportation and neighborhood problems, issues and concerns, suggestions for improvements and any other comments you may have regarding the project. We greatly appreciate your interest and your input.

This handout package contains information about the project as well as information about the Open House itself. The Open House is being conducted in the Open Forum style. Five stations are available at which participants can provide input. The five stations align with the five basic elements of the study. The stations are:

- Station 1 – Planned Major Development Projects
- Station 2 – Planned Roadway Projects
- Station 3 – Possible Spot Improvement Locations
- Station 4 – Multimodal: Public Transit, Bicycle and Pedestrian Facilities
- Station 5 – Focus on Neighborhoods

Personnel will be available at each station to accept your comments and answer questions. This format will allow for one on one discussion with agency personnel, consultants or Study Advisory Team members.

Personnel at the stations include representatives from Louisville Metro Planning and Design Services, the Kentucky Transportation Cabinet, TARC, Oxmoor Farm, the University of Louisville and the study consultant Gresham, Smith and Partners (GS&P). We are very grateful to these representatives for their participation.

A brief presentation will be given at 6:30 PM, providing on overview of the project and a summary of public input received to this point. A comment form is provided as the last page of this handout. Please feel free to visit any and all stations, ask questions and provide your comments. You may leave your comments at any station or at the registration table. Your views and comments are important as we proceed with the study. The study report will include a summary of comments received during the study.

Written comments will also be accepted for fifteen days after the meeting. Comments may be mailed to Ms. Aida Copic, Project Manager, Louisville Metro Planning and Design Services, 444 South Fifth Street, 3rd Floor, Louisville, Kentucky 40202.

Again, thank you for being here, and we appreciate your comments.

Hurstbourne Area
Transportation Study and Small Area Plan

Project History

This study is sponsored by the Louisville Metro Government in concert with the District 18 Office and Councilwoman Julie Raque Adams. This study was initiated due to concerns expressed about area traffic congestion, proposed developments and traffic conditions in neighborhoods. A Study Advisory Team (SAT) was formed to offer input throughout the process. A number of major stakeholders are represented on the SAT. These include representatives from:

- District 18 Councilwoman's Office
- Louisville Metro Planning and Design Services
- Kentucky Transportation Cabinet
- TARC
- Oxmoor Farm
- University of Louisville
- Area city representatives
- Homeowners Association
- Homebuilders Association

The consulting engineering firm of Gresham, Smith and Partners was selected to perform the study. The SAT has met three times to date and has offered input on transportation and neighborhood problems, specific problem locations, and area issues and concerns. The SAT has also reviewed information on the Project Purpose and Need Statement.

Public Involvement Plan

The Public Involvement Plan includes the following five components:

- Study Advisory Team (SAT)
- Stakeholder Interviews
- District 18 Resident Survey
- Neighborhoods Meetings
- Public Meetings

In addition to the Study Advisory Team, stakeholder interviews involving 24 people, have been conducted to date. This is in an attempt to gather input at the beginning of the project so that public and agency comments and concerns are expressed and known.

Additionally, a Resident Survey was sent to all residents in District 18 asking for input on traffic flow on major roads and on neighborhood streets, safety concerns, land use issues and multimodal aspects (public transit, bicycles and pedestrians). The survey also asked for recommendations for improvements. The survey was recently sent to residents and compilation of information from the survey is pending.

Two neighborhood meetings are planned as well as two Public Meetings. Tonight's Open House is the first of the two Public Meetings planned for the project.

Study Area

The study area is defined by the map included in this handout. This map is also displayed at each Open House Station.

Project Purpose and Need

Questions and concerns were being raised in regards to existing traffic flow and how planned developments might impact that traffic flow. Also, the area has a number of planned roadway improvement projects in some stage of development. So, how well will these planned roadway improvement projects offset the impacts of traffic and developmental growth? In addition to these planned roadway projects, are there locations on the roadway system that can benefit from some type of spot improvements, such as access management or lengthening a turn lane? What about the multimodal element – what role could public transit and bicycle and pedestrian facilities play in addressing the situation? And, what about quality of life issues in neighborhoods within the study area, in particular cut-through traffic? Could improvements to roadway aesthetics be incorporated into the study?

Considering all these factors, the study emerged as having two components -- a transportation study and a small area plan. Contents of a small area plan are described later in the handout. After considering input from the stakeholder interviews and after discussions with the Study Advisory Team, the following project purpose was drafted:

> ***The purpose of the Hurstbourne Area Transportation Study and Small Area Plan is to analyze traffic, mobility, safety and land use conditions and recommend opportunities for improvement.***

Again, from the stakeholder interviews and Study Advisory Team input, the need for the study is demonstrated by:

- ***Traffic congestion***
- ***Planned developmental growth***
- ***Lack of alternate routes***
- ***Lack of modal choices – transit, bicycle and pedestrian challenges***
- ***Inefficient access management on arterials***
- ***Community concerns over cut-through traffic***
- ***Lack of collective community vision***

Open House Stations

Station 1: Planned Major Development Projects
This station includes site plans for the two major development projects in the area – Oxmoor Farm and the U of L Shelby Campus. Representatives from each development are available to listen to your input and answer questions.

Station 2: Planned Roadway Projects
Personnel at this station from the Kentucky Transportation Cabinet will provide information available on upcoming major roadway projects. These projects include:

- I-64 / Hurstbourne Parkway Interchange
- I-64 / I-264 Interchange
- Hurstbourne Parkway / Shelbyville Road Intersection
- Hurstbourne Parkway additional lane southbound from Shelbyville Road to I-64
- I-264 / Westport Road Interchange
- Westport Road widening
- Bunsen Parkway Extension

Station 3: Possible Spot Improvement Locations
Several problem locations were mentioned during stakeholder interviews. Staff members from Gresham, Smith and Partners are available at this station to discuss specific roadway locations with you, and to receive your input regarding these or other locations. Please provide your comments, concerns and suggestions.

Station 4: Multimodal: Public Transit, Bicycle and Pedestrian Facilities
Representatives from TARC and Gresham, Smith and Partners are available at this station to listen to your input regarding public transit, as well as your thoughts on bicycle and pedestrian facilities.

Station 5: Focus on Neighborhoods
Representatives from Louisville Metro and Gresham, Smith and Partners will be available at this station to listen to your concerns about neighborhoods including cut-through traffic. Various traffic calming techniques are displayed in pictures for your information. Pictures of various streetscape projects are on display for those interested in roadway aesthetics. Also, examples of small area plans are available for your information.

Small Area Plan

A Small Area Plan supplements the Comprehensive Plan for Metro Louisville by providing more detailed guidance on future development and land-use policies for a specifically-defined area or neighborhood. Each plan is required by ordinance to include certain basic plan elements. These elements include an area identity narrative, a vision statement, a land use/community form component, a mobility component, a plan implementation section, and an executive summary. The plan may also contain optional components to address issues unique to the area.

The Hurstbourne Small Area Plan will provide land-use, mobility, and community design recommendations to improve and enhance the character and function of the area as an important regional marketplace, strengthen and preserve the area's vibrant, long-established residential neighborhoods, and create better transitions between the two often disparate uses.

Thanks, Again

We do appreciate your attendance and input. Please register your comments on the comment form and leave the form in one of the comment boxes at the stations or at the registration table.

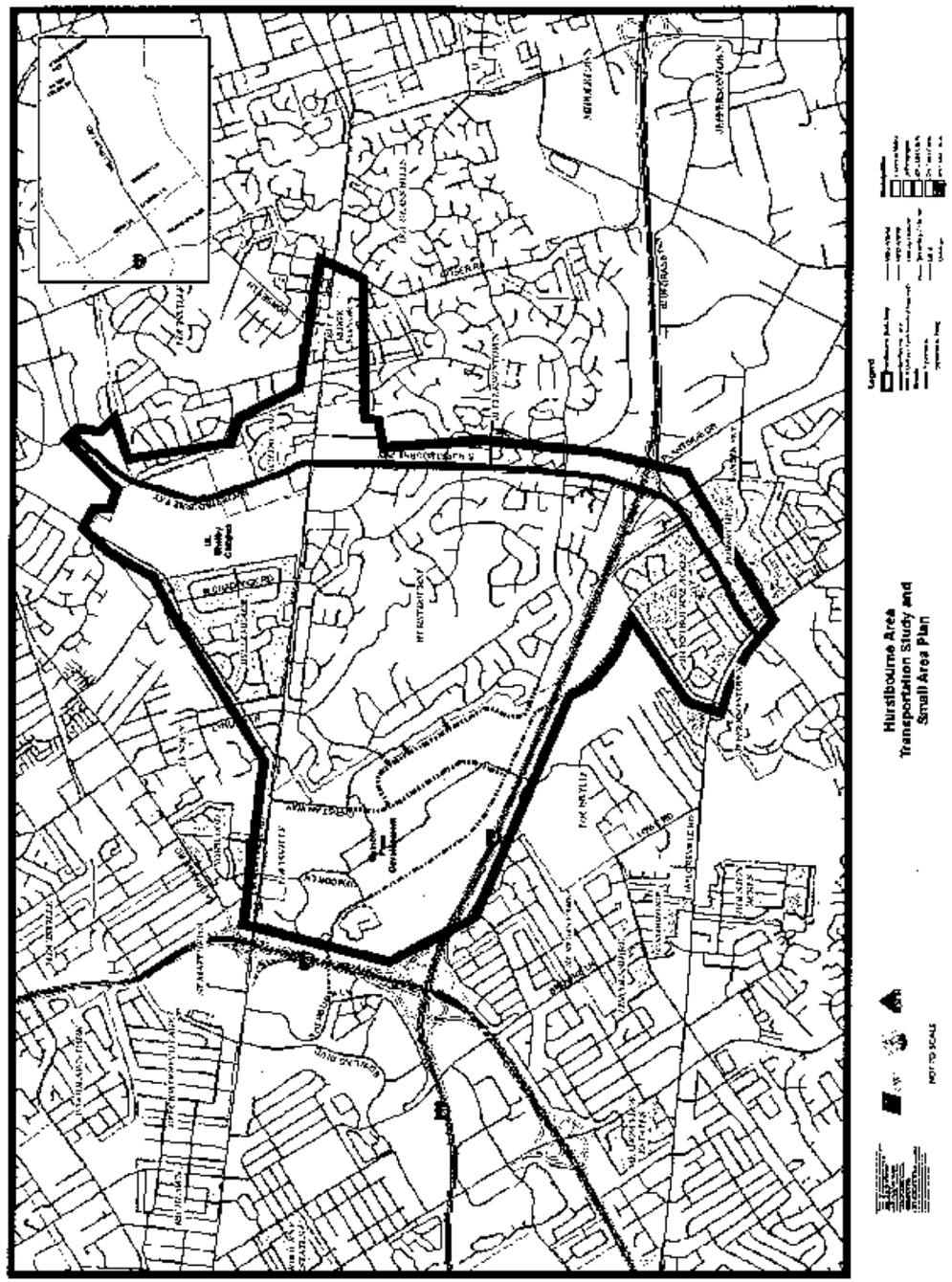

Comment Form

Hurstbourne Area
Transportation Study and Small Area Plan

Open House – November 1, 2005

Name _____ **Address** _____

Please provide any input you have on problems, specific problem locations, issues and concerns, suggestions for improvement or views you have regarding the study area.

Station 1: Planned Major Development Projects

_____

_____

_____

_____

_____

Station 2: Planned Roadway Projects

_____

_____

_____

_____

_____

Station 3: Possible Spot Improvement Locations

_____

_____

_____

_____

_____

Comment Form (cont.)

Hurstbourne Area
Transportation Study and Small Area Plan

Open House
November 1, 2005

Please provide any input you have on problems, specific problem locations, issues and concerns, suggestions for improvement or views you have regarding the study area.

Station 4: Multimodal: Public Transit, Bicycle and Pedestrian Facilities

Station 5: Focus on Neighborhoods

Other Comments

Please place form in comment box or return comments within 15 days to Ms. Aida Copic, Project Manager, Louisville Metro Planning and Design Services, 444 South Fifth Street, 3rd Floor, Louisville, KY 40202.

Comment Form

Hurstbourne Area
Transportation Study and Small Area Plan

Open House – November 1, 2005

Name Debbie Wright Address 9001 Hurstwood Ct

Please provide any input you have on problems, specific problem locations, issues and concerns, suggestions for improvement or views you have regarding the study area.

Station 1: Planned Major Development Projects

I am very worried that the noise from the overpass of Bunsen will be much greater. With it high up there are no trees or houses (buildings) to block it.

Station 2: Planned Roadway Projects

Do not want another lane on Hurstbourne lane. It is only busy 5:15-5:45. We are tearing up green space, Plus the more lanes you have the more traffic you invite. It will also add noise. We should wait till the exit from Watterson to West port Road opens to see how much traffic that eliviates.

Station 3: Possible Spot Improvement Locations

Do not want more offices, Restaurants, and shops. Really want a nice neighborhood with new homes. I would love to upgrade the whole area with a new subdivision. It would bring more young families. Do Not want any government subsidized housing, or cheap houses. We have not seen an increase in our area like Brownsboro Road, because we have allowed too much developement and increase in Road size.

Comment Form (cont.)

Hurstbourne Area
Transportation Study and Small Area Plan

Open House
November 1, 2005

Please provide any input you have on problems, specific problem locations, issues and concerns, suggestions for improvement or views you have regarding the study area.

Station 4: Multimodal: Public Transit, Bicycle and Pedestrian Facilities

Would love to be able to walk and cross hurstbourne at Lion station.

Station 5: Focus on Neighborhoods

We are lossing the prestiege of our area. It is lossing its green space, and with each lane on Hurstbourne we become more like Dixie Highway. If people do not want to live in the area, they buy homes out, which creat more traffic & pollution. We have a vested interest to keep this area nice

Other Comments

What we need are more nice houses so people will stop moving further out in the county and create more pollution as they drive so far.

Please place form in comment box or return comments within 15 days to Ms. Aida Copic, Project Manager, Louisville Metro Planning and Design Services, 444 South Fifth Street, 3rd Floor, Louisville, KY 40202.

Comment Form

Hurstbourne Area
Transportation Study and Small Area Plan

Open House – November 1, 2005

Name Susan Clem Address 9014 Linn Station Rd.

Please provide any input you have on problems, specific problem locations, issues and concerns, suggestions for improvement or views you have regarding the study area.

Station 1: Planned Major Development Projects

Linn Station Lyndon Lane To Hurstbourne Farm area Plan I don't Connect These Roads To Plan I The Traffic would cut Through

Station 2: Planned Roadway Projects

Station 3: Possible Spot Improvement Locations

Comment Form (cont.)

Hurstbourne Area
Transportation Study and Small Area Plan

Open House
November 1, 2005

Please provide any input you have on problems, specific problem locations, issues and concerns, suggestions for improvement or views you have regarding the study area.

Station 4: Multimodal: Public Transit, Bicycle and Pedestrian Facilities

Station 5: Focus on Neighborhoods

Other Comments

Please place form in comment box or return comments within 15 days to Ms. Aida Copic, Project Manager, Louisville Metro Planning and Design Services, 444 South Fifth Street, 3rd Floor, Louisville, KY 40202.

Comment Form

Hurstbourne Area
Transportation Study and Small Area Plan

Open House – November 1, 2005

Name Ron Schneider **Address** 3619 Johnston Way

Please provide any input you have on problems, specific problem locations, issues and concerns, suggestions for improvement or views you have regarding the study area.

Station 1: Planned Major Development Projects

Station 2: Planned Roadway Projects

Station 3: Possible Spot Improvement Locations

Comment Form (cont.)

Hurstbourne Area
Transportation Study and Small Area Plan

Open House
November 1, 2005

Please provide any input you have on problems, specific problem locations, issues and concerns, suggestions for improvement or views you have regarding the study area.

Station 4: Multimodal: Public Transit, Bicycle and Pedestrian Facilities

On the Bunsen/Christian/Bowling Extension over I-64 and I-264, bicycle and pedestrian facilities are crucial. The KTPOA long-range plan did not include bike facilities on the I-64 crossing here. Far better pedestrian facilities are needed all along Hurstbourne Ln., including the planned I-64 interchange reworking. Better ped facilities needed all over this area.

Station 5: Focus on Neighborhoods

Other Comments

Please place form in comment box or return comments within 15 days to Ms. Aida Copic, Project Manager, Louisville Metro Planning and Design Services, 444 South Fifth Street, 3rd Floor, Louisville, KY 40202.

Comment Form

Hurstbourne Area
Transportation Study and Small Area Plan

Open House – November 1, 2005

Name _____ **Address** _____

Please provide any input you have on problems, specific problem locations, issues and concerns, suggestions for improvement or views you have regarding the study area.

Station 1: Planned Major Development Projects

Station 2: Planned Roadway Projects

Station 3: Possible Spot Improvement Locations

Comment Form (cont.)

Hurstbourne Area
Transportation Study and Small Area Plan

Open House
November 1, 2005

Please provide any input you have on problems, specific problem locations, issues and concerns, suggestions for improvement or views you have regarding the study area.

Station 4: Multimodal: Public Transit, Bicycle and Pedestrian Facilities

Need sidewalks on Dorsey Way & Dorsey Ln.
sidewalks thruout area need better coordination.
for example, new piece just west of Baskin-Robbins
doesn't make any sense.

Station 5: Focus on Neighborhoods

Overall this is a very nice, reasonably priced
area to live if you always use a car.
Shopping areas are especially pedestrian
unfriendly.
One other thought - very important not to let vacant
Buehler's at Shelbyville/Blankenbaker become like old Stonybrook
Winn-Dixie

Other Comments

Please place form in comment box or return comments within 15 days to Ms. Aida Copic, Project Manager, Louisville Metro Planning and Design Services, 444 South Fifth Street, 3rd Floor, Louisville, KY 40202.

Comment Form

Hurstbourne Area
Transportation Study and Small Area Plan

Open House – November 1, 2005

Name _____ **Address** _____

Please provide any input you have on problems, specific problem locations, issues and concerns, suggestions for improvement or views you have regarding the study area.

Station 1: Planned Major Development Projects

Station 2: Planned Roadway Projects

1. I'd like to see that Bunsen Pkwy constructed. It seems like I will not live long enough to see any of these improvements though - everything is "maybe by 2020".
2. Opportunity? It would be very nice to have more lanes on I-64 between I-264 and Hurstbourne.

Station 3: Possible Spot Improvement Locations

Major problem: It's hard to leave many of the shopping centers on Hurstbourne Pkwy, especially if a right turn means going the wrong way.

Comment Form (cont.)

Hurstbourne Area
Transportation Study and Small Area Plan

Open House
November 1, 2005

Please provide any input you have on problems, specific problem locations, issues and concerns, suggestions for improvement or views you have regarding the study area.

Station 4: Multimodal: Public Transit, Bicycle and Pedestrian Facilities

Transit east of Oxmoor mall is very poor. If you miss the bus in Middletown you have to wait almost two hours. And Hurstbourne Rd. (a shopping district!) has no weekend service.

Station 5: Focus on Neighborhoods

1. Peoples fears about cut-thru traffic are probably correct so you'll probably need a few "traffic calmers"
2. Compliment: Southern Hurstbourne is one of the area's more scenic neighborhoods. I also like Norwood.

Other Comments

1. In general there aren't enough pedestrian-friendly connections between neighborhoods.

Please place form in comment box or return comments within 15 days to Ms. Aida Copic, Project Manager, Louisville Metro Planning and Design Services, 444 South Fifth Street, 3rd Floor, Louisville, KY 40202.

Comment Form

Hurstbourne Area
Transportation Study and Small Area Plan

Open House – November 1, 2005

Name Jonathan Martinez **Address** 117 N. Chadwick Rd

Please provide any input you have on problems, specific problem locations, issues and concerns, suggestions for improvement or views you have regarding the study area.

Station 1: Planned Major Development Projects

Station 2: Planned Roadway Projects

Station 3: Possible Spot Improvement Locations

Comment Form (cont.)

Hurstbourne Area
Transportation Study and Small Area Plan

Open House
November 1, 2005

Please provide any input you have on problems, specific problem locations, issues and concerns, suggestions for improvement or views you have regarding the study area.

Station 4: Multimodal: Public Transit, Bicycle and Pedestrian Facilities

Station 5: Focus on Neighborhoods

- N. Chadwick Rd is pass through – requires speed deterrent (speed bumps, etc.)
- stop light @ Shelbyville Rd & Chadwick needed.

Other Comments

On any road expansion, sidewalks should be a consideration, where needed & appropriate. My immediate need is N. Chadwick across U of L Shelby Campus.

Please place form in comment box or return comments within 15 days to Ms. Aida Copic, Project Manager, Louisville Metro Planning and Design Services, 444 South Fifth Street, 3rd Floor, Louisville, KY 40202.

Comment Form

Hurstbourne Area
Transportation Study and Small Area Plan

Open House – November 1, 2005

Name Ken Crimm Address 12206 Fort Ct 40223

Please provide any input you have on problems, specific problem locations, issues and concerns, suggestions for improvement or views you have regarding the study area.

Station 1: Planned Major Development Projects

Station 2: Planned Roadway Projects

Station 3: Possible Spot Improvement Locations

Comment Form (cont.)

Hurstbourne Area
Transportation Study and Small Area Plan

Open House
November 1, 2005

Please provide any input you have on problems, specific problem locations, issues and concerns, suggestions for improvement or views you have regarding the study area.

Station 4: Multimodal: Public Transit, Bicycle and Pedestrian Facilities

I'd like to see a mass transit system that came from Shelby Campus down the middle of Hover. to 64 at Watterson split one to Airport & U of L campus the other downtown. Then build on this from prospect, Southend and Dixie. when people are stuck at a light, and they see a train go by they too will want to ride. Maybe my great grandchildren could see this. Think about —

Station 5: Focus on Neighborhoods

Other Comments

Please place form in comment box or return comments within 15 days to Ms. Aida Copic, Project Manager, Louisville Metro Planning and Design Services, 444 South Fifth Street, 3rd Floor, Louisville, KY 40202.

Comment Form

Hurstbourne Area
Transportation Study and Small Area Plan

Open House – November 1, 2005

Name Linda Benz **Address** 10203 Judith CT.

Please provide any input you have on problems, specific problem locations, issues and concerns, suggestions for improvement or views you have regarding the study area.

Station 1: Planned Major Development Projects

I strongly favor the planned development of the U of L Shelby campus. The "Bio-Containment" lab could be a major plus for our community.

Station 2: Planned Roadway Projects

The traffic management plans for the North Hurstbourne-Shelbyville Rd intersection are long overdue. Currently there are too many access points in a very short distance.

Station 3: Possible Spot Improvement Locations

Comment Form (cont.)

Hurstbourne Area
Transportation Study and Small Area Plan

Open House
November 1, 2005

Please provide any input you have on problems, specific problem locations, issues and concerns, suggestions for improvement or views you have regarding the study area.

Station 4: Multimodal: Public Transit, Bicycle and Pedestrian Facilities

Quality bike lanes are sorely needed. Can we find unused railroad right of ways to use, as Iowa & Wisconsin have done?

Station 5: Focus on Neighborhoods

Other Comments

Please place form in comment box or return comments within 15 days to Ms. Aida Copic, Project Manager, Louisville Metro Planning and Design Services, 444 South Fifth Street, 3rd Floor, Louisville, KY 40202.

Comment Form

Hurstbourne Area
Transportation Study and Small Area Plan

Open House – November 1, 2005

Name Sandra Curtis **Address** 403 South Lyndon

Please provide any input you have on problems, specific problem locations, issues and concerns, suggestions for improvement or views you have regarding the study area.

Station 1: Planned Major Development Projects

Station 2: Planned Roadway Projects

Station 3: Possible Spot Improvement Locations

Comment Form (cont.)

Hurstbourne Area
Transportation Study and Small Area Plan

Open House
November 1, 2005

Please provide any input you have on problems, specific problem locations, issues and concerns, suggestions for improvement or views you have regarding the study area.

Station 4: Multimodal: Public Transit, Bicycle and Pedestrian Facilities

Regarding safety for Pedestrians, sidewalks on South Lyndon. Hurstbourne has sidewalks on main street but none on South Lyndon

Station 5: Focus on Neighborhoods

The proposed access from Osmond Woods Farms Lane is a dead end travel road in Hurstbourne. Main access to South Lyndon would be best, an alternate would be to reduce the # of access roads into the City of Auroura & "cut through" those access roads & attempt to "in" one way "connection" to discourage but not isolate the City of going West & going East but one way.

Other Comments

Please place form in comment box or return comments within 15 days to Ms. Aida Copic, Project Manager, Louisville Metro Planning and Design Services, 444 South Fifth Street, 3rd Floor, Louisville, KY 40202.

Comment Form

Hurstbourne Area
Transportation Study and Small Area Plan

Open House – November 1, 2005

Name Curt Clayton **Address** 8215 Camberley Dr.

Please provide any input you have on problems, specific problem locations, issues and concerns, suggestions for improvement or views you have regarding the study area.

Station 1: Planned Major Development Projects

New interchanges at UofL Campus appear appropriate. Interconnection of Oxmoor Dev. & City of Hurstbourne are VERY inappropriate. High density of Oxmoor traffic MUST be precluded from entering the City of Hurstbourne (cut-thru-traffic)!

Station 2: Planned Roadway Projects

Much cut-thru traffic would result if high density Oxmoor traffic were ever allowed to access to Hurstbourne City streets – significantly degrading the Hurstbourne City quality of life and severely depressing the value of Hurstbourne residential ~~traffic~~ property.

Station 3: Possible Spot Improvement Locations

Intersection of Lyndon Lane & Nottingham Pkwy. If Oxmoor traffic is allowed to cut-thru the City of Hurstbourne to get to Oxmoor Dev., the intersection of Camberley Drive & Nottingham Pkwy will become congested & probably will require a traffic control light.

Comment Form (cont.)

Hurstbourne Area
Transportation Study and Small Area Plan

Open House
November 1, 2005

Please provide any input you have on problems, specific problem locations, issues and concerns, suggestions for improvement or views you have regarding the study area.

Station 4: Multimodal: Public Transit, Bicycle and Pedestrian Facilities

A section should be "cut" out of the grass boulevard of Nottingham Pkwy & added to another foot width of Nottingham Pkwy to achieve a dedicated bicycle/jogging path for the full length of Nottingham Pkwy from Lin Station to Lyndon Lane. of about 4' wide

Station 5: Focus on Neighborhoods

Speed bumps – whatever you call them should NOT be considered. The best approach would be to install permanent closures to all streets which could possibly be used by Oxmoor Dev. for access to Hurstbourne + the city of

Other Comments

Construct a large permanent wall between the City of Hurstbourne & the Oxmoor Dev.!!

Please place form in comment box or return comments within 15 days to Ms. Aida Copic, Project Manager, Louisville Metro Planning and Design Services, 444 South Fifth Street, 3rd Floor, Louisville, KY 40202.

Comment Form

Hurstbourne Area
Transportation Study and Small Area Plan

Open House – November 1, 2005

Name Dennis Meyer **Address** 9102 Devington Dr.

Please provide any input you have on problems, specific problem locations, issues and concerns, suggestions for improvement or views you have regarding the study area.

Station 1: Planned Major Development Projects

I started avoiding the North Hurstbourne corridor as commerical development increased. I plan on ~~avoiding~~ continuing to avoid this area in the future.

Station 2: Planned Roadway Projects

I think the congestion caused by the current Hurstbourne Pkwy / I-64 interchange will improve under new proposals by shifting problems away from the accesses I use.

Station 3: Possible Spot Improvement Locations

Comment Form (cont.)

Hurstbourne Area
Transportation Study and Small Area Plan

Open House
November 1, 2005

Please provide any input you have on problems, specific problem locations, issues and concerns, suggestions for improvement or views you have regarding the study area.

Station 4: Multimodal: Public Transit, Bicycle and Pedestrian Facilities

Station 5: Focus on Neighborhoods

Other Comments

I feel speeding throughout the whole area needs to be controlled. The large number of U-Turns on Hurstbourne Pkwy indicates something is wrong.

Please place form in comment box or return comments within 15 days to Ms. Aida Copic, Project Manager, Louisville Metro Planning and Design Services, 444 South Fifth Street, 3rd Floor, Louisville, KY 40202.

Comment Form

Hurstbourne Area
Transportation Study and Small Area Plan

Open House – November 1, 2005

Name [illegible] **Address** 9222 Marlboro

Please provide any input you have on problems, specific problem locations, issues and concerns, suggestions for improvement or views you have regarding the study area.

Station 1: Planned Major Development Projects

Station 2: Planned Roadway Projects

Station 3: Possible Spot Improvement Locations

Hurstbourne - Lime Stone
All of Hurstbourne Lane

Comment Form (cont.)

Hurstbourne Area
Transportation Study and Small Area Plan

Open House
November 1, 2005

Please provide any input you have on problems, specific problem locations, issues and concerns, suggestions for improvement or views you have regarding the study area.

Station 4: Multimodal: Public Transit, Bicycle and Pedestrian Facilities

① Would like to see Pedestrian & Bicycle Paths. Could put Louisville out front if well thought out. ② More shelters for Bus riders.

Station 5: Focus on Neighborhoods

Other Comments

Please place form in comment box or return comments within 15 days to Ms. Aida Copic, Project Manager, Louisville Metro Planning and Design Services, 444 South Fifth Street, 3rd Floor, Louisville, KY 40202.

Comment Form

Hurstbourne Area
Transportation Study and Small Area Plan

Open House – November 1, 2005

Name MARK FRENCH **Address** 908 Exmoor Ave 40223

Please provide any input you have on problems, specific problem locations, issues and concerns, suggestions for improvement or views you have regarding the study area.

Station 1: Planned Major Development Projects

Great plan to relocate Shelby Campus Entrance to Shelbyville Rd - it needs safety improvement - Make the Bunsen Parkway extension over I 64 & I 264 a complete street - safe for pedestrian & Bicycle traffic

Station 2: Planned Roadway Projects

- Need to have Bunsen Extension made a complete street → safe for peds & bicycle
- Provide ped underpasses to cross major rodds - see underpass near Dorsey Ln and Hurstbourne (near McDonalds)

Station 3: Possible Spot Improvement Locations

- Create Under passes to get people through major roads & intersections.
- see the ped underpass existing at hurstbourne and UPS Drive.

Comment Form (cont.)

Hurstbourne Area
Transportation Study and Small Area Plan

Open House
November 1, 2005

Please provide any input you have on problems, specific problem locations, issues and concerns, suggestions for improvement or views you have regarding the study area.

Station 4: Multimodal: Public Transit, Bicycle and Pedestrian Facilities

- Need to improve & create connections for pedestrians to commercial areas - use so-called cut throughs on easements or green corridors.
- Make building codes require pedestrian connections

Station 5: Focus on Neighborhoods

- Need to make connections between commercial & residential areas suitable for walking.

Other Comments

- Make Mass transit accessible to neighborhoods by providing corridors safe for pedestrian and bike travel.
- Make traffic slower along major roads
- Make better intersection connections - safer.

Please place form in comment box or return comments within 15 days to Ms. Aida Copic, Project Manager, Louisville Metro Planning and Design Services, 444 South Fifth Street, 3rd Floor, Louisville, KY 40202.

Comment Form

Hurstbourne Area
Transportation Study and Small Area Plan

Open House – November 1, 2005

Name _____ **Address** _____

Please provide any input you have on problems, specific problem locations, issues and concerns, suggestions for improvement or views you have regarding the study area.

Station 1: Planned Major Development Projects

Station 2: Planned Roadway Projects

Blue Ridge Manor

Station 3: Possible Spot Improvement Locations

there is a development being planned at Dorsey Lane & Shelbyville road. That does nothing for the Community other than the property tax it will generate. We currently have a turn lane for Blue Ridge & a turn lane for Dorsey Lane. The traffic turning left in Dorsey Lane are are entering the lane near Dorsey way leftish line left. This will eventually be a serious accident there or even a death. Lets do something to prevent this from happening [illegible]

Comment Form (cont.)

Hurstbourne Area
Transportation Study and Small Area Plan

Open House
November 1, 2005

Please provide any input you have on problems, specific problem locations, issues and concerns, suggestions for improvement or views you have regarding the study area.

Station 4: Multimodal: Public Transit, Bicycle and Pedestrian Facilities

Station 5: Focus on Neighborhoods

Other Comments

Please place form in comment box or return comments within 15 days to Ms. Aida Copic, Project Manager, Louisville Metro Planning and Design Services, 444 South Fifth Street, 3rd Floor, Louisville, KY 40202.

Comment Form

Hurstbourne Area
Transportation Study and Small Area Plan

Open House – November 1, 2005

Name Lois Wagner **Address** _____

Please provide any input you have on problems, specific problem locations, issues and concerns, suggestions for improvement or views you have regarding the study area.

Station 1: Planned Major Development Projects

Station 2: Planned Roadway Projects

Station 3: Possible Spot Improvement Locations

Exit from Oxmoor Shopping Center on to Shelbyville Rd into a right turn lane causes traffic delays on right turn onto Christian Way.

Comment Form (cont.)

Hurstbourne Area
Transportation Study and Small Area Plan

Open House
November 1, 2005

Please provide any input you have on problems, specific problem locations, issues and concerns, suggestions for improvement or views you have regarding the study area.

Station 4: Multimodal: Public Transit, Bicycle and Pedestrian Facilities

Station 5: Focus on Neighborhoods

Other Comments

Please place form in comment box or return comments within 15 days to Ms. Aida Copic, Project Manager, Louisville Metro Planning and Design Services, 444 South Fifth Street, 3rd Floor, Louisville, KY 40202.

Comment Form

Hurstbourne Area
Transportation Study and Small Area Plan

Open House – November 1, 2005

Name AL PEPPER **Address** 405 FOREST PARK RD 40223

Please provide any input you have on problems, specific problem locations, issues and concerns, suggestions for improvement or views you have regarding the study area.

Station 1: Planned Major Development Projects

Station 2: Planned Roadway Projects

The Louisville area's traffic control is the worst in the country. There will be no improvement until KDOT / Metro Public Works pulls itself into the 21st Century.

Station 3: Possible Spot Improvement Locations

Comment Form (cont.)

Hurstbourne Area
Transportation Study and Small Area Plan

Open House
November 1, 2005

Please provide any input you have on problems, specific problem locations, issues and concerns, suggestions for improvement or views you have regarding the study area.

Station 4: Multimodal: Public Transit, Bicycle and Pedestrian Facilities

Do not build bike paths at the expense of necessary road improvements.

Station 5: Focus on Neighborhoods

Protect the integrity of the Dorsey Lane / Shelbyville Rd area.

Other Comments

Please place form in comment box or return comments within 15 days to Ms. Aida Copic, Project Manager, Louisville Metro Planning and Design Services, 444 South Fifth Street, 3rd Floor, Louisville, KY 40202.

Comment Form

Hurstbourne Area
Transportation Study and Small Area Plan

Open House – November 1, 2005

Name PEGGY THIEVENING **Address** 9120 BUNSEN PARK RD

Please provide any input you have on problems, specific problem locations, issues and concerns, suggestions for improvement or views you have regarding the study area.

Station 1: Planned Major Development Projects

Station 2: Planned Roadway Projects

MY QUESTION IS WHEN WILL THIS BUNSEN EXTENSION & POSSIBLE STONEYBROOK EXTENSION HAPPEN? OUR FAMILY FARM AND NURSERY BUSINESS HAS BEEN IN LIMBO FOR YEARS BECAUSE OF THIS UNCERTAINTY. WE DON'T KNOW WHERE TO BUILD GREENHOUSES OR LOCATE TREES & LANDSCAPING. WE CAN'T EXPAND THE BUSINESS IF ROAD RIGHT OF WAY AND RIGHT OF EMMINENT DOMAIN PULL THE RUG OUT FROM UNDER US.

Station 3: Possible Spot Improvement Locations

Comment Form (cont.)

Hurstbourne Area
Transportation Study and Small Area Plan

Open House
November 1, 2005

Please provide any input you have on problems, specific problem locations, issues and concerns, suggestions for improvement or views you have regarding the study area.

Station 4: Multimodal: Public Transit, Bicycle and Pedestrian Facilities

Station 5: Focus on Neighborhoods

Other Comments

Please place form in comment box or return comments within 15 days to Ms. Aida Copic, Project Manager, Louisville Metro Planning and Design Services, 444 South Fifth Street, 3rd Floor, Louisville, KY 40202.

Comment Form

Hurstbourne Area
Transportation Study and Small Area Plan

Open House – November 1, 2005

Name KEITH DEAVERS **Address** 1810 WICKHAM WAY 40223

Please provide any input you have on problems, specific problem locations, issues and concerns, suggestions for improvement or views you have regarding the study area.

Station 1: Planned Major Development Projects

Station 2: Planned Roadway Projects

Station 3: Possible Spot Improvement Locations

(1) ELIMINATE TRAFFIC LIGHT IN FRONT OF STRIP CENTER ACROSS FROM OXMOOR CENTER AND FEED ALL TRAFFIC TO EXIT AT CHRISTIAN WAY LIGHT INCLUDING OXMOOR TOYOTA.

(2) MAKE LONG TURNING LANE WESTBOUND S-VILLE RD ONTO ~~CHRISTIAN WAY INTO OXMOOR CENTER. OR MOVE~~ CHRISTIAN WAY TO EXIT INTO FRONT OF OXMOOR CENTER NEAR DICK'S SPORTING GOODS WHERE THERE IS CURRENTLY AN EXIT AND ADD A LIGHT THERE.

(3) ADD A LIGHT AND LEFT TURN LANES AT WHIPPSMILL R. + SHELBYVILLE RD AS THIS IS A MAJOR BACKUP AND A DANGEROUS INTERSECTION.

Comment Form (cont.)

Hurstbourne Area
Transportation Study and Small Area Plan

Open House
November 1, 2005

Please provide any input you have on problems, specific problem locations, issues and concerns, suggestions for improvement or views you have regarding the study area.

Station 4: Multimodal: Public Transit, Bicycle and Pedestrian Facilities

Station 5: Focus on Neighborhoods

Other Comments

ADD A NEW ROAD FROM WHIPPS MILL RD TO N. HURSTBORNE LN BEHIND SHELBY CAMPUS AS THIS WOULD CUT DOWN ON BACKUPS AT S-VILLE + H-BOURNE ROADS AND CUT DOWN ON THRU TRAFFIC IN SUBDIVISIONS. MAY ALSO STRIPE WHIPPSMILL TO INCLUDE LEFT TURN LANES AT LYNDON LN AND ALLOW THROUGH TRAFFIC TO GO STRAIGHT WITH LESS DELAY LIKE THEY DID AT LAGRANGE RD + UPS / WHIPPSMILL RD

Please place form in comment box or return comments within 15 days to Ms. Aida Copic, Project Manager, Louisville Metro Planning and Design Services, 444 South Fifth Street, 3rd Floor, Louisville, KY 40202.

John Henney

Dan Curtis

Paula Well

Comment Form

Hurstbourne Area
Transportation Study and Small Area Plan

Open House – November 1, 2005

Name _____ **Address** _____

Please provide any input you have on problems, specific problem locations, issues and concerns, suggestions for improvement or views you have regarding the study area.

Station 1: Planned Major Development Projects

Station 2: Planned Roadway Projects

Station 3: Possible Spot Improvement Locations

Comment Form (cont.)

Hurstbourne Area
Transportation Study and Small Area Plan

Open House
November 1, 2005

Please provide any input you have on problems, specific problem locations, issues and concerns, suggestions for improvement or views you have regarding the study area.

Station 4: Multimodal: Public Transit, Bicycle and Pedestrian Facilities

Positive Comments Re WP/Shelby

Station 5: Focus on Neighborhoods

Other Comments

Please place form in comment box or return comments within 15 days to Ms. Aida Copic, Project Manager, Louisville Metro Planning and Design Services, 444 South Fifth Street, 3rd Floor, Louisville, KY 40202.

RECEIVED
NOV 15 2005
PLANNING & DESIGN SERVICES

Comment Form

Hurstbourne Area
Transportation Study and Small Area Plan

Open House – November 1, 2005

Name WILLIAM D. FOWLER Address 10213 HARTLEY DRIVE LOU. 40223

Please provide any input you have on problems, specific problem locations, issues and concerns, suggestions for improvement or views you have regarding the study area.

Station 1: Planned Major Development Projects

THE COMMUNITY WOULD BENEFIT MORE FROM THE OPEN SPACE RATHER THAN YET MORE DEVELOPMENT. OTHER THAN THE LAB AT SHELBY CAMPUS WITH ITS QUESTIONABLE LOCATION, IS THERE ANYTHING UNIQUE OR NECESSARY IN THESE PLANS? THERE WAS NONE THAT I SAW.

Station 2: Planned Roadway Projects

WHAT THESE DEVELOPMENTS WILL ADD IS MORE TRAFFIC TO ALREADY CONGESTED SHELBYVILLE ROAD AND HURSTBOURNE PARKWAY. DESPITE THE NEW INTERCHANGE AT WESTPORT ROAD, THE WATTERSON EXPRESSWAY/SHELBYVILLE ROAD INTERCHANGE WILL CONTINUE TO BE VERY CONGESTED. THE PLANS SHOULD BE REVISED TO BE MORE TRAFFIC FRIENDLY, IF WE MUST HAVE THIS DEVELOPMENT.

Station 3: Possible Spot Improvement Locations

DORSEY LANE & SHELBYVILLE ROAD ARE INDEED A PROBLEM. ONE SOLUTION IS TO LIMIT, AND EVEN BETTER, PROHIBIT DEVELOPMENT AT THAT CORNER. IN FACT THE WHOLE LENGTH OF DORSEY LANE HAS SEEN A TREMENDOUS INCREASE IN TRAFFIC IN THE LAST FEW YEARS AND IT WOULD BE GREAT IF IT WERE INCLUDED IN THIS STUDY. WARD AVENUE & THE OWL CREEK ENTRANCE ARE NOW SAFETY HAZARDS AT TIMES.

Comment Form (cont.)

Hurstbourne Area
Transportation Study and Small Area Plan

Open House
November 1, 2005

Please provide any input you have on problems, specific problem locations, issues and concerns, suggestions for improvement or views you have regarding the study area.

Station 4: Multimodal: Public Transit, Bicycle and Pedestrian Facilities

I AM AN AVID BIKER AND COULD EASILY RIDE MY BIKE TO WORK. HOWEVER, THE AREA AS A WHOLE HAS SEEN A TREMENDOUS INCREASE IN TRAFFIC AND I NO LONGER FEEL SAFE ON MANY OF THE ROADS. IF THERE WERE A WAY TO MAKE IT SAFER TO CROSS SHELBYVILLE & HURSTBOURNE LANES AT PLACES, I THINK MORE PEOPLE WOULD AT LEAST TRY BIKING.

Station 5: Focus on Neighborhoods

I'VE HEARD RUMBLINGS RECENTLY THAT SHELBYVILLE ROAD MAY BE EXPANDED TO HANDLE SOME OF THIS TRAFFIC. ONE OF THE MOST UNIQUE FEATURES OF THE AREA ARE THE TREES THAT LINE SHELBYVILLE. IF THIS HAPPENS, IT WILL BE A PRIME EXAMPLE OF WHY RESIDENTS & DEVELOPERS ARE OFTEN AT ODDS. NOT ONLY DO WE HAVE UNWANTED DEVELOPMENT, BUT ALSO A LOSS IN ADDITION, WHETHER ITS MORE TRAFFIC OR LOSS OF ANOTHER SPOT.

Other Comments

THANK YOU FOR THIS OPPORTUNITY TO SPEAK OUT. I DON'T LIKE BEING SO NEGATIVE, BUT IT HAS BEEN MY OBSERVATION THAT WHEN IT COMES TO DEVELOPMENT, THE RESIDENTS GENERALLY ARE OVERRULED OR IGNORED, YET WE MUST LIVE WITH WHATEVER COMES TO PASS. PLEASE BE THOUGHTFUL IN THE DELIBERATIONS OVER THESE TWO DEVELOPMENTS.

Please place form in comment box or return comments within 15 days to Ms. Aida Copic, Project Manager, Louisville Metro Planning and Design Services, 444 South Fifth Street, 3rd Floor, Louisville, KY 40202.

LOUISVILLE · JEFFERSON COUNTY METRO

RECEIVED NOV 14 PLANNING & DESIGN SERVICES

District 18 Resident Survey

Thank you for completing this questionnaire. When you have finished please mail it to: Councilwoman Julie Raque Adams, 601 W. Jefferson Street, Louisville, KY 40202.

Traffic Flow Please rate the quality of traffic flow in the study area for ...	very poor	poor	fair	good	very good
1. Major Roads	1	2	(3)	4	5
2. Residential Streets	1	2	3	(4)	5

What are your top three concerns regarding traffic flow on major roads?
1. VOLUME OF TRAFFIC
2.
3.

What are your top three concerns regarding traffic flow on residential streets?
1. SPEED
2.
3.

Safety Please rate the safety of your neighborhood streets regarding ...	very poor	poor	fair	good	very good
1. Cars	1	(2)	3	4	5
2. Pedestrians	1	2	(3)	4	5
3. Bicyclists	1	2	(3)	4	5

What are your top three concerns regarding safety?
1. TRAFFIC SPEED
2. LACK OF LIGHTING
3. NO SIDEWALKS

Land Use Issues/Pending Developments

What effect do you think the future development in the Hurstbourne and Shelbyville Road corridors will have on the quality of life in adjacent residential neighborhoods?

What are your top three concerns regarding nearby pending developments? — traffic
2. traffic
3. traffic

Continues on back...

How far is your place of work from home? 14 Miles

What is your primary mode of transportation to and from work?
X Car ___ Bus ___ Bike ___ Walking ___ Other

RECEIVED NOV 14 PLANNING & DESIGN SERVICES

If you are aware of "cut-through" routes in the neighborhoods, do you...
- ___ Never use cut-through routes
- X Use only when main roads are clogged
- ___ Occasionally use cut-though routes
- ___ Weekly use cut-through routes
- ___ Daily use cut-through routes

Do you bike, walk or take TARC to get around: ___ Yes X No

I do not bike, walk or take TARC because:
___ Health reasons ___ Don't feel safe X Not enough sidewalks or bike lanes
___ Distances traveled are too far ___ Other, please explain:

Considering future development, what would you recommend be done to improve traffic flow and safety in our area? Please be specific by location.
more street lights on North Chadwick Rd
cars speeding down North Chadwick (used as a cut thru)
drainage problems @ 118 N. Chadwick (near road by driveway)
auto emissions in Shelbyville / Hurstbourne area

Are you interested in being updated on pending developments in our area?
X Yes ___ No

NAME: Lyn & Tom Mattingly
ADDRESS: 117 N. Chadwick Rd
CITY, STATE, ZIP CODE: Lou KY 40223
EMAIL: lynmattingly@insightbb.com

Thank you for taking the time to fill out this survey. We appreciate your comments.

Hurstbourne Town Meeting

Name	Address
Lois Wagner	310 S. Lyndon Ln.
Elaine Harrell	1247 Hogarth Dr.
Vernon Coulter	8508 Chizzfield Dr.
Robert B Clem	9014 Linn Station Rd
Susan Clem	" " " "
Wilbur Clive Cengee	1111 Col. Anderson
Ruby Walls-Farmer	9107 LINN STATION Rd
Paul C. Riley	900 Oxmoor Woods. Okey
Brown Allen	906 Rugby Place
Bob Kiesling	8507 Nottingham Pkwy
Sunita Kiesling	" "
Alan Lillington	503 Leicester Cir.
Martin Weber	9112 Hurstwood Cr
Joan Weber	"
Harper [illegible]	1307 Bloffington Ct
Ramsey A. + C.	9015 Linn Station Rd.
Bob Engler	8315 Salford Way
Lynne Hamilton	8302 Cheshire Way.
[illegible]	602 Edinburgh
Helen F. Hilbert	602 Nottingham Pkwy
Carolyn Thelken	10107 Cave Creek Rd 40223
[illegible]	8408 Nottingham Ct 40222
Milton / Karen Murphy	9005 Langton Ln. 40222

Hurstbourne Town Meeting

Name	Address
D.Y. Sessoms	8911 Linn STATION
Sharon DiBrello	8810 Linn Station
David Dennis Meyer	9102 Dennington Drive
Mike Kuzmich	TARC, 1000 W. Broadway 40203
Sharill Halstead	208 S. Lyndon Ln 40222
Norma Sleby	8506 Cheltenham Cir
Jean & Jerry Hacherlin	1114 Col. Anderson Pky
Bob & Jean Ernst	306 S. Lyndon Ln.
Diane Young	8212 Nottingham Pkwy
[illegible]	9 Muirfield Pl
JoAnne Feldman	8809 Dennington
Larry Lehman	8313 Nottingham Pkwy
Herschel Martin	8709 Nottingham Pkwy
PHIL KREGOR	5006 BUCKINGHAM TERR
Linda Robt. Black	815 Bedfordshire Rd.
Marcy Bruce Lotteth	1014 Fulham Ct
DON WINTZBERGER	8710 STOCKPORT RD
ANN BARNETT	8328 CROYDON Circle
James Barnett	"
Caroline Johnson	8307 Cheshire Way
[illegible]	1107 Oxmoor Woods Pkwy

Hurstbourne Town Meeting

Name	Address
Pat Hubbard	705 Colonel Anderson Pkwy
Earl Hubbard	" " " "
Karen Mohammadi	9000 Nottingham Pkwy
Julie + Mike Baumer	402 Edinburgh Pl
Charlene Coulter & Ralph	8600 Wm Borne Way
Carol Hinkle	501 Leicester Circle
Mike + Lynn Hamilton	8315 Nottingham Pkwy
J. X. Harding	802 Oxmoor Woods Pkwy
Cynthia Shaw	8709 Stockport Rd.
Michael L. Perkins	531 Nottingham Pkwy
Cindy Renser	8611 Blackpool Dr
Judge Janice Martin	1302 Oxmoor Woods Pkwy
Bob Black	815 Bloxhamshire Rd
Larry + Ann Beck	8405 Nottingham Pkwy
Rebecca M. Gray	1243 Hogarth Dr.
Cynthia Mertzig	8610 Cheltenham Ct.
Margaret Reinhart	8211 Cambridge Dr.
Bert Malley	8615 Nottingham Pkwy
Sandy + Parker Curtis	403 South Lyndon Ln
MIKE SMITH	1101 Oxmoor Woods Pkwy
HARPER DAVIS	406 EDINBURGH PL
Nancy Weber Grover	700 Colonel Anderson Pkwy.
[illegible] Grover	9106 Hurstwood Ct.

Hurstbourne Town Meeting

Name	Address
Rusty Wells	503 Croydon Ct
C. Brown Allen	906 Rugby Place 40222
Linda Allen	906 Rugby Place 40222
Charlotte Hall	8207 Paddington Dr 40222
Phillip Hall	8207 Paddington Dr 40222
Carol Hensley	9514 Wessex Pl. 40222
Mark Wagner	8306 Croydon Cir 40222
Barry Paul	8806 Linn Station Rd 40222
Chris Black	1207 Hogarth Drive 40222
Constance McIntosh	102 So Lyndon Ln 40222
Julie Foster	104 S. Lyndon Ln 40222
STEVE HESS	517 LEICESTER CIRCLE
Dale Zanchi	8509 Nottingham Pkwy
Sandra Zanchi	8509 Nottingham Pkwy
Bob Silverthorn	904 Albemarle Ct 40222
Harlan B. Blount	9000 Peterborough Ct.
Paula Gillespie	9518 Wessex Place
Jim Cutter	400 Colonel Anderson Pkwy 40222
Roy Upton	8710 Creighton Ct
Helen Upton	8710 Creighton Ct.
Greg Gorman	9101 Linn Station Rd
Gloria Carr	1004 Oxmoor Wds Pkwy
Snyders	502 Bedfordshire Rd

Hurstbourne Town Meeting

Name	Address
Rod & Claudia Brown	1240 Innerary Ct. 40222
Harold & Janice Shoyt	8213 Nottingham Pkwy 40222
Stan & Mary Margaret Berry	8505 Cheltenham Cir 40222
Rue Metzendorf	8902 Lippincott Rd. 40222
Ken & Bonnie Chester	89[illegible] Nottingham Pky 40222
EVA + BERNIE Buchanan	8306 Salford Way 40222
Jean + George Calvert	9011 Nottingham Pkwy 40222
Barbara Davidson	8224 Nottingham Pkwy 40222
Court Clayton	8215 Camberley Drive
Anna Bundetti	800 Ogmoor Woods Pkwy 40222
Ian Bundetti	" " " " "
Bryce Finch	8621 Nottingham Pkwy. 40222
Barbara Dakem	802 Nottingham Pkwy 40222
Ed Dakem	802 Nottingham Pkwy 40222
Deborah Wright	9001 Horstwood Ct 40222
Bobbi Toni Roberts	511 Bedfordshire Rd 40222
Barb Voet	116 Hatherleigh Ln. 40222
Mary Ann Brock	8614 Nottingham Pky 40222
Ervin & Ramie Galjatovic	304 S Lyndon Ln, 40222
Emily Abernathy	9000 Linsta Rd 40222
Olga Zenger	605 Nottingham Pkwy
Jack Finlinson	8905 Peterborough Dr
Joe Ryan	218 S Lyndon Ln

Hurstbourne Town Meeting

Name	Address
Jack Harris	1226 Hogwell Dr.
[illegible] Rouse	1316 Leighton Circle
R J Ellis	1329 Leighton Circle
Eric Stumb	807 Bedfordshire Rd.
Jeff Fisher	802 Colonel Anderson Pkwy

Hurstbourne Town Meeting

Name	Address
Cheryl + David Franck #	710 Nottingham Pkwy 40222

Hurstbourne Town Meeting

Name	Address
Keele W. Mills	8502 Wimborne Way 40222

Louisville Metro
Planning and Design Services

District 18 Councilwoman
Julie Raque Adams

Hurstbourne Area
Transportation Study and Small Area Plan

Hurstbourne Town Meeting

Hurstbourne Christian Church
601 Nottingham Parkway
Louisville, Kentucky 40222

November 8, 2005
7:00 PM to 9:00 PM

GRESHAM
SMITH AND
PARTNERS

Hurstbourne Area
Transportation Study and Small Area Plan

Ladies and Gentlemen:

Welcome to Hurstbourne Town Meeting for the **Hurstbourne Area Transportation Study and Small Area Plan**. The project is in the very early stages. The purpose of the Town Meeting is to receive your input and share information available to this point. Currently, we are gathering public input on area transportation and neighborhood problems, issues and concerns, suggestions for improvements and any other comments you may have regarding the project. We greatly appreciate your interest and your input.

This handout package contains information about the project as well as information about the Town Meeting itself. The Town Meeting is being conducted in the Open Forum style. Five stations are available at which participants can provide input. The five stations align with the five basic elements of the study. The stations are:

- Station 1 – Planned Major Development Projects
- Station 2 – Planned Roadway Projects
- Station 3 – Possible Spot Improvement Locations
- Station 4 – Multimodal: Public Transit, Bicycle and Pedestrian Facilities
- Station 5 – Focus on Neighborhoods

Personnel will be available at each station to accept your comments and answer questions. This format will allow for one on one discussion with agency personnel, consultants or Study Advisory Team members.

Personnel at the stations include representatives from Louisville Metro Planning and Design Services, the Kentucky Transportation Cabinet, TARC, the University of Louisville and the study consultant Gresham, Smith and Partners (GS&P). We are very grateful to these representatives for their participation.

A brief presentation will be given at 7:00 PM, providing on overview of the project and a summary of public input received to this point. A comment form is provided as the last page of this handout. Please feel free to visit any and all stations, ask questions and provide your comments. You may leave your comments at any station or at the registration table. Your views and comments are important as we proceed with the study. The study report will include a summary of comments received during the study.

Written comments will also be accepted for fifteen days after the meeting. Comments may be mailed to Ms. Aida Copic, Project Manager, Louisville Metro Planning and Design Services, 444 South Fifth Street, 3rd Floor, Louisville, Kentucky 40202.

Again, thank you for being here, and we appreciate your comments.

Hurstbourne Area
Transportation Study and Small Area Plan

Project History

This study is sponsored by the Louisville Metro Government in concert with the District 18 Office and Councilwoman Julie Raque Adams. This study was initiated due to concerns expressed about area traffic congestion, proposed developments and traffic conditions in neighborhoods. A Study Advisory Team (SAT) was formed to offer input throughout the process. A number of major stakeholders are represented on the SAT. These include representatives from:

- District 18 Councilwoman's Office
- Louisville Metro Planning and Design Services
- Kentucky Transportation Cabinet
- TARC
- Oxmoor Farm
- University of Louisville
- Area city representatives
- Homeowners Association
- Homebuilders Association

The consulting engineering firm of Gresham, Smith and Partners was selected to perform the study. The SAT has met three times to date and has offered input on transportation and neighborhood problems, specific problem locations, and area issues and concerns. The SAT has also reviewed information on the Project Purpose and Need Statement.

Public Involvement Plan

The Public Involvement Plan includes the following five components:

- Study Advisory Team (SAT)
- Stakeholder Interviews
- District 18 Resident Survey
- Neighborhoods Meetings
- Public Meetings

In addition to the Study Advisory Team, stakeholder interviews involving 25 people, have been conducted to date. This is in an attempt to gather input at the beginning of the project so that public and agency comments and concerns are expressed and known.

Additionally, a Resident Survey was sent to all residents in District 18 asking for input on traffic flow on major roads and on neighborhood streets, safety concerns, land use issues and multimodal aspects (public transit, bicycles and pedestrians). The survey also asked for recommendations for improvements. The survey was recently sent to residents and compilation of information from the survey is pending.

Two neighborhood meetings are planned as well as two Public Meetings. Tonight's Town Meeting is the first of the two Neighborhood Meetings planned for the project.

Study Area

The study area is defined by the map included in this handout. This map is also displayed at each Town Meeting Station.

Project Purpose and Need

Questions and concerns were being raised in regards to existing traffic flow and how planned developments might impact that traffic flow. Also, the area has a number of planned roadway improvement projects in some stage of development. So, how well will these planned roadway improvement projects offset the impacts of traffic and developmental growth? In addition to these planned roadway projects, are there locations on the roadway system that can benefit from some type of spot improvements, such as access management or lengthening a turn lane? What about the multimodal element – what role could public transit and bicycle and pedestrian facilities play in addressing the situation? And, what about quality of life issues in neighborhoods within the study area, in particular cut-through traffic? Could improvements to roadway aesthetics be incorporated into the study?

Considering all these factors, the study emerged as having two components -- a transportation study and a small area plan. Contents of a small area plan are described later in the handout. After considering input from the stakeholder interviews and after discussions with the Study Advisory Team, the following project purpose was drafted:

> ***The purpose of the Hurstbourne Area Transportation Study and Small Area Plan is to analyze traffic, mobility, safety and land use conditions and recommend opportunities for improvement.***

Again, from the stakeholder interviews and Study Advisory Team input, the need for the study is demonstrated by:

- ***Traffic congestion***
- ***Planned developmental growth***
- ***Lack of alternate routes***
- ***Lack of modal choices – transit, bicycle and pedestrian challenges***
- ***Inefficient access management on arterials***
- ***Community concerns over cut-through traffic***
- ***Lack of collective community vision***

Town Meeting Stations

Station 1: Planned Major Development Projects
This station includes site plans for the two major development projects in the area – Oxmoor Farm and the U of L Shelby Campus. Representatives are available to listen to your input and answer questions.

Station 2: Planned Roadway Projects
Personnel at this station from the Kentucky Transportation Cabinet will provide information available on upcoming major roadway projects. These projects include:

- I-64 / Hurstbourne Parkway Interchange
- I-64 / I-264 Interchange
- Hurstbourne Parkway / Shelbyville Road Intersection
- Hurstbourne Parkway additional lane southbound from Shelbyville Road to I-64
- I-264 / Westport Road Interchange
- Westport Road widening
- Bunsen Parkway Extension

Station 3: Possible Spot Improvement Locations
Several problem locations were mentioned during stakeholder interviews. Staff members from Gresham, Smith and Partners are available at this station to discuss specific roadway locations with you, and to receive your input regarding these or other locations. Please provide your comments, concerns and suggestions.

Station 4: Multimodal: Public Transit, Bicycle and Pedestrian Facilities
Representatives from TARC and Gresham, Smith and Partners are available at this station to listen to your input regarding public transit, as well as your thoughts on bicycle and pedestrian facilities.

Station 5: Focus on Neighborhoods
Representatives from Louisville Metro and Gresham, Smith and Partners will be available at this station to listen to your concerns about neighborhoods including cut-through traffic. Various traffic calming techniques are displayed in pictures for your information. Pictures of various streetscape projects are on display for those interested in roadway aesthetics. Also, examples of small area plans are available for your information.

Small Area Plan

A Small Area Plan supplements the Comprehensive Plan for Metro Louisville by providing more detailed guidance on future development and land-use policies for a specifically-defined area or neighborhood. Each plan is required by ordinance to include certain basic plan elements. These elements include an area identity narrative, a vision statement, a land use/community form component, a mobility component, a plan implementation section, and an executive summary. The plan may also contain optional components to address issues unique to the area.

The Hurstbourne Small Area Plan will provide land-use, mobility, and community design recommendations to improve and enhance the character and function of the area as an important regional marketplace, strengthen and preserve the area's vibrant, long-established residential neighborhoods, and create better transitions between the two often disparate uses.

Thanks, Again

We do appreciate your attendance and input. Please register your comments on the comment form and leave the form in one of the comment boxes at the stations or at the registration table.

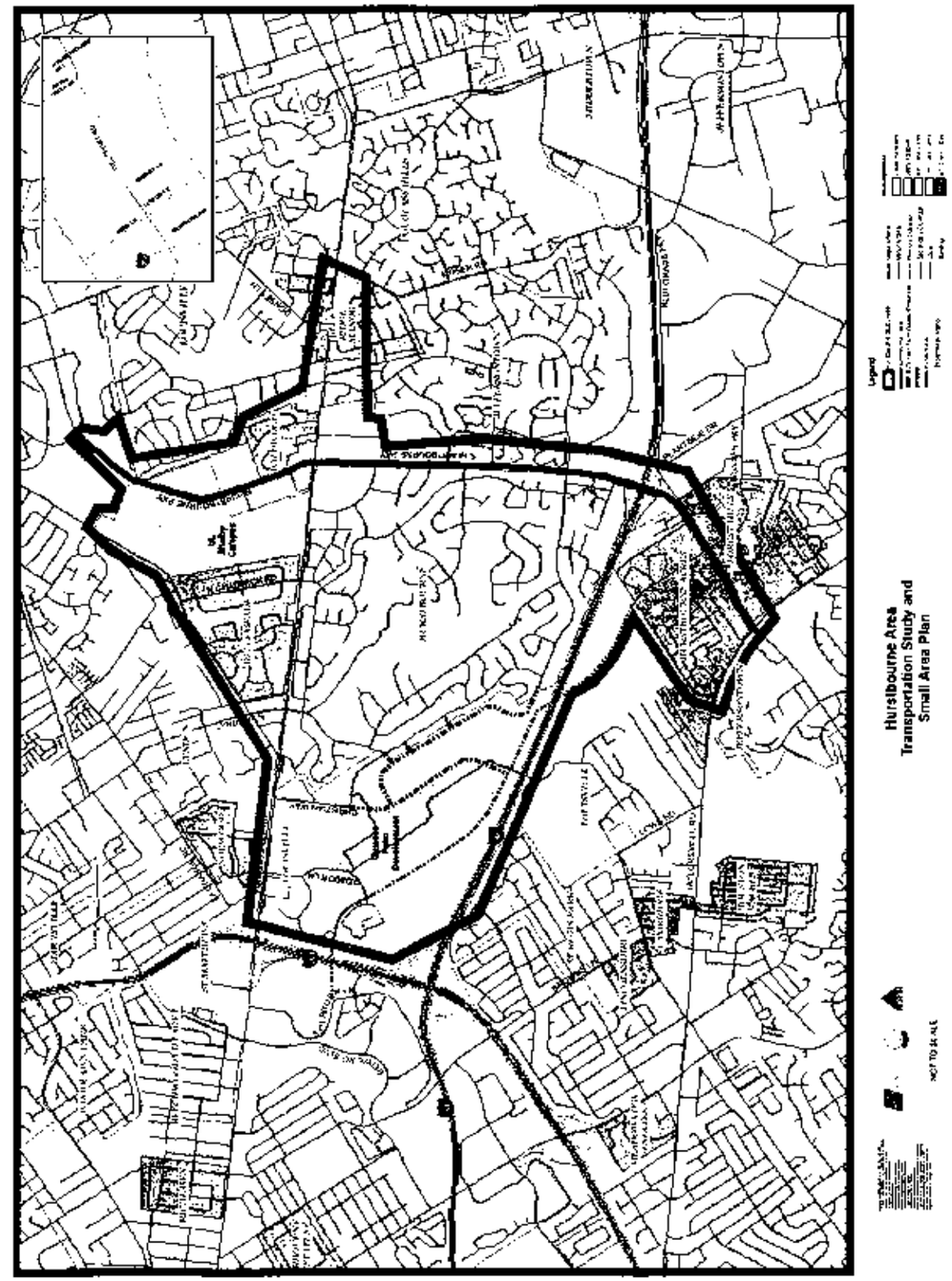

Comment Form

Hurstbourne Area
Transportation Study and Small Area Plan

Hurstbourne Town Meeting – November 8, 2005

Name _____ **Address** _____

Please provide any input you have on problems, specific problem locations, issues and concerns, suggestions for improvement or views you have regarding the study area.

Station 1: Planned Major Development Projects

Station 2: Planned Roadway Projects

Station 3: Possible Spot Improvement Locations

Comment Form (cont.)

Hurstbourne Area
Transportation Study and Small Area Plan

Hurstbourne Town Meeting
November 8, 2005

Please provide any input you have on problems, specific problem locations, issues and concerns, suggestions for improvement or views you have regarding the study area.

Station 4: Multimodal: Public Transit, Bicycle and Pedestrian Facilities

Station 5: Focus on Neighborhoods

Other Comments

Please place form in comment box or return comments within 15 days to Ms. Aida Copic, Project Manager, Louisville Metro Planning and Design Services, 444 South Fifth Street, 3rd Floor, Louisville, KY 40202.

District 18 Resident Survey

Thank you for completing this questionnaire. When you have finished please mail it to: Councilwoman Julie Raque Adams, 601 W. Jefferson Street, Louisville, KY 40202.

Traffic Flow Please rate the quality of traffic flow in the study area for ...	very poor	poor	fair	good	very good
1. Major Roads	1	2	(3)	4	5
2. Residential Streets	1	2	(3)	4	5

What are your top three concerns regarding traffic flow on major roads?

1.
2.
3.

What are your top three concerns regarding traffic flow on residential streets?

1. Too many cars use Hurstbourne - (Nottingham / Linn Station
2. Lyndon) to by pass traffic on Hurstbourne PARKWAY +
3. Shelbyville Road

Safety Please rate the safety of your neighborhood streets regarding ...	very poor	poor	fair	good	very good
1. Cars	1	2	3	4	(5)
2. Pedestrians	1	(2)	3	4	5
3. Bicyclists	1	(2)	3	4	5

What are your top three concerns regarding safety?

1. Speeding - Limit on Nottingham is 25 but too many cars
2. drive 45-50. We need speed bumps (rolling bumps)
3. + stop signs

Land Use Issues/Pending Developments

What effect do you think the future development in the Hurstbourne and Shelbyville Road corridors will have on the quality of life in adjacent residential neighborhoods? Lower property values. My sister recently purchased a home in Hurstbourne + she did not want a home on Linn Station or S. Lyndon because of cut through traffic

What are your top three concerns regarding nearby pending developments? Cut through traffic

2. Apartments vs Homes
3.

Continues on back...

How far is your place of work from home? 1 Miles

What is your primary mode of transportation to and from work?

✓ Car ___ Bus ___ Bike ___ Walking ___ Other

If you are aware of "cut-through" routes in the neighborhoods, do you...

✓ Never use cut-through routes - I live in Hurstbourne
___ Use only when main roads are clogged
___ Occasionally use cut-though routes
___ Weekly use cut-through routes
___ Daily use cut-through routes

Do you bike, walk or take TARC to get around: ___ Yes ✓ No

I do not bike, walk or take TARC because:

___ Health reasons ___ Don't feel safe ___ Not enough sidewalks or bike lanes
___ Distances traveled are too far ✓ Other, please explain: I need my car for driving to appointments

Considering future development, what would you recommend be done to improve traffic flow and safety in our area? Please be specific by location. Block Christian Way. If I need to go to Dixie Mall I don't mind going to Shelbyville Road & not using Christian Way. Traffic studies (Paid for by Developers) will show that you can build apartments, hotels, office buildings and it will help traffic flow. Ex - When CARITAS was going to build a medical building Not to Blairwood and traffic was projected to increase by 4,000 cars per day they said it would help traffic flow. I don't believe them. The project was approved but they decided not to build. The land behind Dixie will be developed. Please don't wait + see how much the cut through traffic increases & Block it before it happens.

Look at GATED COMMUNITY options 502-339-1400

Are you interested in being updated on pending developments in our area?

✓ Yes ___ No

NAME: DAVID FRANCIS

ADDRESS: 710 Nottingham Pk.

CITY, STATE, ZIP CODE: Louisville KY 40222

EMAIL:

Thank you for taking the time to fill out this survey. We appreciate your comments.

Comment Form

Hurstbourne Area
Transportation Study and Small Area Plan

Hurstbourne Town Meeting – November 8, 2005

RECEIVED
NOV 2 8 2005
PLANNING & DESIGN SERVICES

Name Linda T. Black Address 815 Bedfordshire Road
429-9999

Please provide any input you have on problems, specific problem locations, issues and concerns, suggestions for improvement or views you have regarding the study area.

Station 4: Multimodal: Public Transit, Bicycle and Pedestrian Facilities

Station 5: Focus on Neighborhoods

Other Comments

As a realtor w/ 25+ yrs experience, I believe we should make Hurstbourne a gated community. Stationary gates on all stub streets (we would be glad to go around to get to facilities at Oxmoor Farm) The other gates using a sticker like that that is automatically read at Toll Booths at gates on Hurstbourne + Seaton Springs

Please place form in comment box or return comments within 15 days to Ms. Aida Copic, Project Manager, Louisville Metro Planning and Design Services, 444 South Fifth Street, 3rd Floor, Louisville, KY 40202.

over

Lyndon + Shelbyville Road. We would have to leave Whittington Pkwy available because of businesses until it becomes gated at Nottingham and Linn Station by apartments. This would make us the only gated community in Louisville therefore increase our safety + property value.

Even, if we have to give the stickers to those cars who have children in both schools, or 2 churches, this would be several thousand, not 200 thousand that would be using our neighborhood as a way to get to Oxmoor or the Mall. All you have to do is at 9:00pm during Nov. + Dec. stand on the parkway + see all of the employees / shoppers leaving

11-14-05

OTHER COMMENTS:

1. Present Hurstbourne street problems: Nottingham Parkway is dangerously now used by business folks as a cut-through at morning and evening rush hours and most exceed the 25 MPH speed limit. I fear someone could be seriously injured some day. There are many walkers and joggers on this residential street.

2. The location of the Lowe Middle School in the a.m. and p.m. now has a single lane backup of several blocks of parent autos bringing and picking up their child. This literally blocks Nottingham Parkway and Oxfordshire in both directions.

3. Your present plan shows street connections from Hurstbourne area to the proposed Oxmoor Farm Development by extending Lyndon Lane South, opening Lincolnshire Drive and opening Stamford Drive--connecting all three to Oxmoor Woods Parkway. That will allow a very large portion of all the traffic in and out of the Farm Development to flow onto Oxmoor Woods Parkway and to South Lyndon Lane and exit or enter at the now very busy intersection of Lyndon and Shelbyville Road.

It will be one huge mistake to open these 3 connectors--they should remain forever closed as they are now. I fully believe the majority of all present Hurstbourne residents have already many times expressed these concerns in many public meetings over the past five years. Please give valid concern for all property owners in this fine area of Hurstbourne --now some 35 years in existence.

- Bryce Finch
8621 Nottingham Pkwy
(502) 426-4258
ebryffin@juno.com

To: JULIE ROGUE ADAMS. 11/23/05

I WAS OUT OF TOWN AND NOT ABLE TO ATTEND YOUR MEETING. THESE ARE MY COMMENTS. YOUR INTEREST IN OUR THOUGHTS IS APPRECIATED.

Comment Form

Hurstbourne Area
Transportation Study and Small Area Plan

Hurstbourne Town Meeting – November 8, 2005

RECEIVED NOV 28 2005 PLANNING & DESIGN SERVICES

Name RICHARD MORTBERG Address 8610 CHELTENHAM CT.

Please provide any input you have on problems, specific problem locations, issues and concerns, suggestions for improvement or views you have regarding the study area.

Station 1: Planned Major Development Projects

PEDESTRIAN WALKWAYS AND BIKE PATHS ARE ALMOST NON EXISTANT IN THE HURSTBOURNE AREA. MUCH AUTOMOBILE TRAFFIC COULD BE ELIMINATED IF PEOPLE WERE PROVIDED WITH SAFE WALKWAYS AND BIKE PATHS TO AND FROM LOCAL SHOPPING - VALU MKT, WALGREENS & EVEN OXMOOR.

Station 2: Planned Roadway Projects

PROVIDE BETTER ACCESS FROM EAST BOUND WHIPPS MILL RD. TO NORTH HURSTBOURNE PKY. (NEED THE NE PART OF SHELBY CAMPUS. THIS WOULD GREATLY REDUCE EAST BOUND SHELBYVILLE RD TRAFFIC.

Station 3: Possible Spot Improvement Locations

CLOVERLEAF INTERSECTIONS ARE NEEDED AT HURSTBOURNE PKWY AND I 64. THIS WOULD ELIMINATE TRAFFIC CONGESTION FOR BOTH NORTH & SOUTH BOUND TRAFFIC BY ELIMINATING THE LEFT HAND TURNS. SEVERAL TRAFFIC LIGHTS ALSO COULD BE ELIMINATED. ACCESS TO BURGHASE INDUST. PARK SHOULD BE CHANGED TO EAST OF HURSTBOURNE PKWY. THIS WOULD ELIMINATE THE NEED FOR ANOTHER LIGHT ON HURST. PKW TO THE INDUSTRIAL PARK.

Comment Form (cont.)

Hurstbourne Area
Transportation Study and Small Area Plan

Hurstbourne Town Meeting
November 8, 2005

Please provide any input you have on problems, specific problem locations, issues and concerns, suggestions for improvement or views you have regarding the study area.

Station 4: Multimodal: Public Transit, Bicycle and Pedestrian Facilities

PARALLEL ACCESS ROADS SHOULD BE BUILT ON THE EAST AND WEST SIDES OF HURSTBOURNE PKWY BETWEEN I 64 AND SHELBYVILLE RD.

Station 5: Focus on Neighborhoods

ONE OF THE MAJOR OBJECTIONS TO MANY OF THE CHANGES TO EXTENDING S. LYNDON LANE AND ACCESSING CHRISTIAN WAY IS THAT IT WOULD INCREASE TRAFFIC THROUGH HURSTBOURNE BY PEOPLE CUTTING THROUGH. THINK ABOUT HOW THE NEED FOR CUTTING THROUGH CAN BE AVOIDED. OR REDUCED.

Other Comments

ONE WAY IS TO HAVE BETTER SYNCRONIZATION OF TRAFFIC LIGHTS ON SHELBYVILLE RD AND HURSTBOURNE PKWY. IF TRAFFIC FLOW IS SPEEDED UP THE NEED FOR A CUT THROUGH IS REDUCED.

Please place form in comment box or return comments within 15 days to Ms. Aida Copic, Project Manager, Louisville Metro Planning and Design Services, 444 South Fifth Street, 3rd Floor, Louisville, KY 40202.

RECEIVED
NOV 10 2005
PLANNING & DESIGN SERVICES

Comment Form

Hurstbourne Area
Transportation Study and Small Area Plan

Hurstbourne Town Meeting – November 8, 2005

Name Kevin & Ellen Tucker **Address** 217 S. Lyndon Lane

Please provide any input you have on problems, specific problem locations, issues and concerns, suggestions for improvement or views you have regarding the study area.

Station 1: Planned Major Development Projects

Bullitt Farm Development & Shelby Campus
This will create Traffic Gridlock & Force
Traffic to Cut Thru Hurstbourne Sub.

Station 2: Planned Roadway Projects

Station 3: Possible Spot Improvement Locations

Hurstbourne Lane & Shelbyville Road
Needs to be widened from Lyndon
Lane out to middletown, similar to
the Westport Road project to keep
Traffic Out of Hurstbourne & other
Neighborhoods (

Comment Form (cont.)

Hurstbourne Area
Transportation Study and Small Area Plan

Hurstbourne Town Meeting
November 8, 2005

Please provide any input you have on problems, specific problem locations, issues and concerns, suggestions for improvement or views you have regarding the study area.

Station 4: Multimodal: Public Transit, Bicycle and Pedestrian Facilities

Station 5: Focus on Neighborhoods

Subdivisions like Hurstbourne were
Not Built to help Traffic Problems
on Major Roads like Shelbyville Rd
& Hurstbourne Pkwy. Traffic will be Forced
to Cut Thru the Neighborhoods. Those Roads
Should be widened to Keep them out of Neighborhood

Other Comments

We do not believe the "Theory" that more
open Road Connections will Reduce Traffic
in Hurstbourne. IT IS NOT a Solution.
If you Increase Traffic around Hurstbourne, LIKE IT IS
at X-mas We See more Cars in the Neighborhood
It will be a problem

Please place form in comment box or return comments within 15 days to Ms. Aida Copic, Project Manager, Louisville Metro Planning and Design Services, 444 South Fifth Street, 3rd Floor, Louisville, KY 40202.

Comment Form

Hurstbourne Area
Transportation Study and Small Area Plan

Hurstbourne Town Meeting – November 8, 2005

Name Harlan Blount Address 9000 Peterborough Ct

Please provide any input you have on problems, specific problem locations, issues and concerns, suggestions for improvement or views you have regarding the study area.

Station 1: Planned Major Development Projects

Need to determine "status" of major streets & roads in Hurstbourne. Are they built and maintained by Hurstbourne City Taxes? If County/Metro funds are used for building and maintaining "our" streets, then they be controlled by Metro agencies. If Hurstbourne City taxes are used to maintain our streets, we (Hurstbourne City should have final say!

Station 2: Planned Roadway Projects

Need to provide "firm" numbers of occupants for the new buildings that are proposed for "developed" Oxmoor Farms. Projected number of automobile trips to that would enter & leave Oxmoor Farms on a normal business day? How many new roads would need to be built to provide access to & from Oxmoor Farms from I-64, Hurstbourne Pkwy and Shelbyville Rd, without using existing streets in Hurstbourne?

Station 3: Possible Spot Improvement Locations

Lyndon Lane at U.S. 60 needs to be widened to allow 2 lanes south bound – 1 for left turning East on U.S. 60 and the other to cross US60 or turn right on U.S. 60. This would make it safer for traffic going north on So. Lyndon Lane and turning left on to U.S. 60.

Comment Form (cont.)

RECEIVED NOV 14 PLANNING & DESIGN SERVICES

Hurstbourne Area
Transportation Study and Small Area Plan

Hurstbourne Town Meeting
November 8, 2005

Please provide any input you have on problems, specific problem locations, issues and concerns, suggestions for improvement or views you have regarding the study area.

Station 4: Multimodal: Public Transit, Bicycle and Pedestrian Facilities

Station 5: Focus on Neighborhoods

Other Comments

I appreciate the opportunity to come and hear a discussion of the various problems our city and Metro government are facing. Your consideration of the feelings we residents of Hurstbourne have about our surroundings is appreciated

Please place form in comment box or return comments within 15 days to Ms. Aida Copic, Project Manager, Louisville Metro Planning and Design Services, 444 South Fifth Street, 3rd Floor, Louisville, KY 40202.

Comment Form

Hurstbourne Area
Transportation Study and Small Area Plan

Hurstbourne Town Meeting – November 8, 2005

Name Martin Weber Address 9112 Hurstwood Cr

Please provide any input you have on problems, specific problem locations, issues and concerns, suggestions for improvement or views you have regarding the study area.

Station 1: Planned Major Development Projects

Station 2: Planned Roadway Projects

Station 3: Possible Spot Improvement Locations

Martin Weber
9112 Hurstwood Ct

Comment Form (cont.)

Hurstbourne Area
Transportation Study and Small Area Plan

Hurstbourne Town Meeting
November 8, 2005

Please provide any input you have on problems, specific problem locations, issues and concerns, suggestions for improvement or views you have regarding the study area.

Station 4: Multimodal: Public Transit, Bicycle and Pedestrian Facilities

Station 5: Focus on Neighborhoods

Traffic on Dumesnil Pkwy and Lynn Station road is so heavy from thanksgiving to middle of January. that residents can hardly get out of their driveways. I would suggest that you do a traffic count on Hurstbourne street during this period.

Other Comments

I would think to really evaluate the traffic situation that you would do a traffic study instead of making a lot of guessimates about traffic

Please place form in comment box or return comments within 15 days to Ms. Aida Copic, Project Manager, Louisville Metro Planning and Design Services, 444 South Fifth Street, 3rd Floor, Louisville, KY 40202.

30 YEAR RESIDENT OF HURSTBOURNE

Comment Form

Hurstbourne Area
Transportation Study and Small Area Plan

Hurstbourne Town Meeting – November 8, 2005

Name MICHAEL S. PERKINS **Address** 531 NOTTINGHAM PKY

Please provide any input you have on problems, specific problem locations, issues and concerns, suggestions for improvement or views you have regarding the study area.

Station 1: Planned Major Development Projects

THE SIDEWALK ON THE HURSTBOURNE SIDE OF HURSTBOURNE PKY SHOULD BE NORMAL WIDTH INSTEAD OF (FIVE FEET)! THE SIDEWALK SHOULD EXTEND FROM SHELBYVILLE ROAD TO TAYLORSVILLE ROAD AND THIS INCLUDES UNDERNEATH I-64!!

Station 2: Planned Roadway Projects

THE SIDEWALK ON THE JEFFERSONTOWN SIDE OF HURSTBOURNE PKY NEEDS TO BE COMPLETED/CONNECTED. IT IS IN SPOTS AND THEN THERE IS NO SIDEWALK. SAVE FUNDS, BICYCLES AND PEDESTRIANS CAN MAKE DUE, BUT NEED SIDEWALK ON BOTH SIDES OF HURSTBOURNE PKY.

Station 3: Possible Spot Improvement Locations

THESE DEVELOPMENTS WILL PUT A STRAIN ON THE RESIDENTIAL STREETS OF HURSTBOURNE. THE CITY NEEDS TO IMPLEMENT SPEED HUMPS AND MORE STOP SIGNS TO STOP THE CUT THROUGH TRAFFIC ON NOTTINGHAM, LINN STATION AND SOUTH LYNDON LANE.

Comment Form (cont.)

RECEIVED
NOV 14
PLANNING & DESIGN SERVICES

Hurstbourne Area
Transportation Study and Small Area Plan

Hurstbourne Town Meeting
November 8, 2005

Please provide any input you have on problems, specific problem locations, issues and concerns, suggestions for improvement or views you have regarding the study area.

Station 4: Multimodal: Public Transit, Bicycle and Pedestrian Facilities

THE MEXICANS WORK IN ALL THE RESTAURANTS ALONG HURSTBOURNE PKY. THEY LIVE AT VIEUX CARRE APARTMENTS CORNER OF SHELBYVILLE ROAD AND HURSTBOURNE PKY. THEY NEED SIDEWALKS TO WALK UP AND DOWN HURSTBOURNE PKY AND UNDER I-64. IT IS A WASTE OF FUNDS TO INSTALL A FIVE FOOT WIDE SIDEWALK!!

Station 5: Focus on Neighborhoods

DO NOT STOP AT LINN STATION ROAD IMPROVE ROAD/WALK WAY ALL THE WAY TO TAYLORSVILLE ROAD. THIS IS THE WORST AREA SIMPLY CONNECT THE SIDEWALKS.

Other Comments

THE CITY COMMISSIONERS OF HURSTBOURNE ARE AWARE OF THE EXCESSIVE TRAFFIC PROBLEMS NOW AND HAVE DONE NOTHING!! IN TEN YEARS IT WILL BE UNBEARABLE.

Please place form in comment box or return comments within 15 days to Ms. Aida Copic, Project Manager, Louisville Metro Planning and Design Services, 444 South Fifth Street, 3rd Floor, Louisville, KY 40202.

November 8, 2005

To Whom It May Concern:

I attended the Town Meeting for the City of Hurstbourne this evening.

The homeowners who will be affected by the Oxmoor Farm Development out-numbered and out-shouted those who will not be directly affected.

My street, Wessex Place, is a dead end street which is entered directly off S. Hurstbourne Lane. Our concern is the number of accidents that occur at the entrance. Most accidents involve autos crossing three lanes of traffic to turn left on S. Hurstbourne or those turning left into the commercial area opposite Wessex Place. This is a very dangerous intersection on this busy road.

The widening of Hurstbourne (on the west side) that is in the **Planned Roadway Project** is of considerable concern for the safety of Wessex Place residents and other motorists. More than likely, it will significantly increase an already dangerous intersection.

Sincerely,

WESSEX PLACE HOMEOWNERS ASSOCIATION

Chuck Fawcett, President
9530 Wessex Place
Louisville, KY 40222

RECEIVED
NOV 15 2005
PLANNING & DESIGN SERVICES

11-16-05

Comment Form

Hurstbourne Area
Transportation Study and Small Area Plan

Hurstbourne Town Meeting – November 8, 2005 426-0063

Name BERNARD BECKMANN Address 8306 SALFORD WAY

Please provide any input you have on problems, specific problem locations, issues and concerns, suggestions for improvement or views you have regarding the study area.

Station 1: Planned Major Development Projects

OVER

Station 2: Planned Roadway Projects

Station 3: Possible Spot Improvement Locations

Comment Form (cont.)

Hurstbourne Area
Transportation Study and Small Area Plan

Hurstbourne Town Meeting
November 8, 2005

Please provide any input you have on problems, specific problem locations, issues and concerns, suggestions for improvement or views you have regarding the study area.

Station 4: Multimodal: Public Transit, Bicycle and Pedestrian Facilities

Station 5: Focus on Neighborhoods

Other Comments

To eliminate the traffic congestion and to help with future growth in and around our area the only way is to put new roads in without traffic lights to cross our Hurstbourne lane and extend into the industrial park to Shelbyville rd to service Town and the middle town areas and beyond. I can elaborate if you are interested.

Please place form in comment box or return comments within 15 days to Ms. Aida Copic, Project Manager, Louisville Metro Planning and Design Services, 444 South Fifth Street, 3rd Floor, Louisville, KY 40202.

RECEIVED
NOV 23 2005
PLANNING & DESIGN SERVICES

Comment Form

Hurstbourne Area
Transportation Study and Small Area Plan

Hurstbourne Town Meeting – November 8, 2005

Name JoAnne Feldman Address 8809 Denington Drive 40222

Please provide any input you have on problems, specific problem locations, issues and concerns, suggestions for improvement or views you have regarding the study area.

Station 1: Planned Major Development Projects

No new projects until road projects completed. If after projects completed, there is still road congestion problems, restrict new development

Station 2: Planned Roadway Projects

Whittington Parkway should not be made throughway from Shelby campus. This street is already too busy. People do not observe STOP signs at all times in hurry to cut off Hurstbourne/Shelbyville Rd. interchanges

Station 3: Possible Spot Improvement Locations

lights @ Whittington Parkway, Timberwood Circle & Bluegrass Pkwy. need attention even when no traffic on Hurstbourne there are long unnecessary waits for left turns. This creates more car emission pollution in area. Put STOP sign at crosswalk on Nottingham Pkwy. for school crossing. Another STOP is needed behind Opinion Center where apartments exit. There is no STOP for cars coming from apartments.

Comment Form (cont.)

Hurstbourne Area
Transportation Study and Small Area Plan

Hurstbourne Town Meeting
November 8, 2005

Please provide any input you have on problems, specific problem locations, issues and concerns, suggestions for improvement or views you have regarding the study area.

Station 4: Multimodal: Public Transit, Bicycle and Pedestrian Facilities

Public transit should be promoted, but sadly do not see this being used much because of mentality of residents to go when they want to go & not wait. Side areas for bicyclers & walkers would be good. Have found that people still walk in street even where there are sidewalks.

Station 5: Focus on Neighborhoods

Do not think speed bumps and more STOP signs will deter drive-throughs in Hurstbourne. People want out of the traffic jams! See comments on Station 1. Jon Henney was very helpful at answering my questions.

Other Comments

This area is a mess! When I belonged to the now-defunct Hurstbourne Area Business Owners Association years ago, these projects were discussed. Do something! Air quality poor because too many idling cars at intersections not properly timed.

Please place form in comment box or return comments within 15 days to Ms. Alda Copic, Project Manager, Louisville Metro Planning and Design Services, 444 South Fifth Street, 3rd Floor, Louisville, KY 40202.

RECEIVED
NOV 16 ...
PLANNING & DESIGN SERVICES

Comment Form

Hurstbourne Area
Transportation Study and Small Area Plan

Hurstbourne Town Meeting – November 8, 2005

Name _____ Address _____

Please provide any input you have on problems, specific problem locations, issues and concerns, suggestions for improvement or views you have regarding the study area.

Station 1: Planned Major Development Projects

Station 2: Planned Roadway Projects

Station 3: Possible Spot I

A
Mr. & Mrs. Wilbur Angell
1111 Colonel Anderson P
Louisville, KY 40222-5657

Please limit truck traffic from Shelbyville Rd. and Hurstbourne Pkwy as much as it takes.
Do not open new streets for new development. It will absolutely destroy Hurstbourne, the loveliest area – please don't destroy it.
Mr. & Mrs. Wilbur Angell Thanking you

RECEIVED
NOV 17 2005
PLANNING & DES. SVCS. SERVICES

Comment Form

Hurstbourne Area
Transportation Study and Small Area Plan

Open House – November 1, 2005

Name Furman Wallace **Address** 904 Cal Anderson Pkf

Please provide any input you have on problems, specific problem locations, issues and concerns, suggestions for improvement or views you have regarding the study area.

Station 1: Planned Major Development Projects

Station 2: Planned Roadway Projects

Station 3: Possible Spot Improvement Locations

Comment Form (cont.)

Hurstbourne Area
Transportation Study and Small Area Plan

Open House
November 1, 2005

Please provide any input you have on problems, specific problem locations, issues and concerns, suggestions for improvement or views you have regarding the study area.

Station 4: Multimodal: Public Transit, Bicycle and Pedestrian Facilities

Station 5: Focus on Neighborhoods

Other Comments

1 Lyndon, particularly LaGrange Rd and N Hurstbourne lane should have been included in study

2 All of Plainview, especially Linn Station Rd east of Hurstbourne should have been included in study

3 There should have been different people on the counts

Please place form in comment box or return comments within 15 days to Ms. Aida Copic, Project Manager, Louisville Metro Planning and Design Services, 444 South Fifth Street, 3rd Floor, Louisville, KY 40202.

4 Oxmoor Woods Homeowners Assoc, a major player is not represented

JULIE - APPRECIATE THE EFFORT YOU ARE MAKING TO "CIVILIZE" & ORGANIZE THIS PROJECT - EVEN IF THIS DOESN'T OCCUR TIL 2010 the adverse publicity DOESN'T HELP PROP. VALUES. I SUSPECT WE'LL BE TALKING OF GATED COMMUNITIES MORE - THIS IS AN UPSCALE DEVELOPMENT - INCLUDING THE "LESSER" STS - SUCH AS LINN STA WILL AFFECT ALL - DONT GIVE UP THE LADY LIKE & CIVIL APPROACH - IT IS IMPORTANT HOW WE REACH GOALS TOO. THANKS

Comment Form

Hurstbourne Area
Transportation Study and Small Area Plan

Hurstbourne Town Meeting – November 8, 2005

Name Emily Abernathy Address 9000 LINN STA RD.

Please provide any input you have on problems, specific problem locations, issues and concerns, suggestions for improvement or views you have regarding the study area.

Station 1: Planned Major Development Projects

AS I SAID AT THE MEETING, IF THE EPA publicly published A MAP SHOWING THE ONLY AREA EXCEEDING EMISSION & pollution airquality STANDARDS IN THE EAST and IS RIGHT HERE IN HURSTBOURNE - How come the developers ARE BEING allowed to probably double! USUALLY, the EPA can Dump or REDUCE the development. Someone ought to check on this - The property MAY be ~~public~~ PRIVATE - THE AIR POLLUTION IS NOT!

Station 2: Planned Roadway Projects

Someone Knows whether LINN STA IS A public co. ROAD OR NOT! It may be up to LIBERTY BELL but it IS part of HURSTBOURNE - "LOGIC" (ACCORDING TO A 311 OPERATOR) SHOWS LINN STA No. to be PART OF CITY of HURSTBOURNE!

Station 3: Possible Spot Improvement Locations

Entrance to LINN STA LOOKS TOO ORDINARY - A GATE HOUSE, A BRICK CIRCLE, GATES which STAY OPEN - ALL OF THESE could intimidate TRAFFIC - SAME could (NOTTINGHAM) be DONE FOR NOTTINGHAM - gated comm would be OK TOO

LINN STA.

HURSTBOURNE

RECEIVED
NOV 17 2005
TRANSPORTATION SERVICES

Comment Form (cont.)

Hurstbourne Area
Transportation Study and Small Area Plan

Hurstbourne Town Meeting
November 8, 2005

Please provide any input you have on problems, specific problem locations, issues and concerns, suggestions for improvement or views you have regarding the study area.

Station 4: Multimodal: Public Transit, Bicycle and Pedestrian Facilities

Without $600 To join Country club WE HAVE NO PUBLIC AREAS (SUCH AS Doug Hills + Plainview) FOR THE PUBLIC - IT WOULD BE NICE IF RESIDENTS (WHO PAY TAXES + FOR THE STS) COULD HAVE AT LEAST 3 DAYS A mo DURING THE WARM TO ENJOY some AMENITIES @ the Co. Club (Also would Help prop values)

A CITY OF HURST-BOURNE DAY! once a mo.

Station 5: Focus on Neighborhoods

MORE FUNCTIONS AS A CITY - IN ADDITION TO GARDEN CLUB, Could be GROUPS INTERESTED IN THE LOCAL HISTORY, IMPROVEMENTS IN DESIGN of AREA - etc ie A "BRAIN TRUST"

Other Comments

~~YOUR~~ As a mother TRYING TO HELP SHAPE YOUR CHILDREN'S ENVIRONMENT IN A CALM + LADY-LIKE WAY IS REFRESHING - DON'T GET DISCOURAGED - PEOPLE DO NOTICE - HOWEVER DEVELOPERS ARE ALMOST OWNING + PREDETERMINING Lou. development to FAR TOO GREAT A DEGREE - GOOD PEOPLE MUST QUESTION CERTAIN EVENTS - THEY ARE [illegible] INEVITABLE

Please place form in comment box or return comments within 15 days to Ms. Aida Copic, Project Manager, Louisville Metro Planning and Design Services, 444 South Fifth Street, 3rd Floor, Louisville, KY 40202.

605 Nottingham Parkway
Louisville, KY 40222

RECEIVED
NOV 22 2005

November 19, 2005

Ms. Aida Copic
Project Manager
Louisville Metro Planning and Design Services
444 South Fifth Street, 3rd Floor
Louisville, KY 40202

Dear Ms. Copic:

My wife and I reside in Hurstbourne. I work for an engineering company whose primary activities are logistics, traffic flow design within warehouses, and computer simulations and models of traffic (sims and mods). These sims and mods are very close in nature to the models that your engineering consultants should be using to evaluate the efficiency ratings for changes in roadway design and the impact such changes have on traffic flow.

I am qualified by profession to comment on the design of the proposed changes to Hurstbourne Parkway (known here as H-B Pkwy); specifically, adding a sixth lane between Seaton Springs Road and I-64. I am compelled as a concerned environmentalist to notify you, Ms. Raque Adams, and Mr. English that *the proposed widening of Hurstbourne Parkway and the Oxmoor expansion will dramatically worsen traffic congestion if the plan is completed as discussed in the current proposal, because it does not include entrance ramps to service traffic moving onto I-64 east and westbound, nor does it eliminate any stoplights.* Please consider three elements here:

First:
Any roadway expansion of H-B Pkwy that does not include removing at least the three stoplights closest to the I-64 access roads will make traffic worse. To actually improve or speed the flow, a working solution must include one or both of the following: twin frontage roads for local traffic that service existing businesses; and/or dedicated, non-stop lanes both north and south of I-64 that serve as entrances to I-64 east and westbound. Therefore, we need to ask, "When will the I-64 ramp modifications begin?" *Again, using models and simulations, competent engineers would know that a widening of the parkway alone will hurt traffic flow, yet the developers and planners and construction companies are all prepared to do it anyway.*

Also, why are the planners refusing to answer residents' queries into the environmental impact as they did during the meeting on November 8? Could it have anything to do with the proposed Oxmoor expansion? I ask these questions because your planners and some elected officials have admitted in public that they will, in effect, cause considerable harm to our air quality and damage in other ways to Hurstbourne, a vital neighborhood, if Linn Station Road is connected to Oxmoor Farms expansion (the McMansions, hotel, businesses). Yet, in the face of clear evidence, they are willing to try to "sell" their plans at our town meetings. You may have noticed at the town meetings that the "sell" is not working.

Second:
Greg Groves, the lead H-B Pkwy engineer, has told me personally that there "is no money in the budget for noise control". One person on the meeting panel told my wife at the November 8th meeting that "those barriers don't work." Since a noise barrier was constructed as part of the Blankenbaker Road project and it is within the scope or domain of *your office/Metro & State*, then by logical deduction, one of two scenarios is provable beyond doubt: a) either the person who spoke to my wife is misinformed, or b) he purposely misled my wife because he knows that noise barriers do work, but does not want to spend the money. So, either noise suppression barriers do work, and your plan should include one for H-B Pkwy between Seaton Springs and Linn Station roads like the one along Blankenbaker Road, or noise barriers do not work, in which case, Metro and State offices wasted highway funds on those already built. Which is true?

Third:
This year's EPA study already disclosed the level of pollution in the area. Further burdening our neighborhoods with the traffic from the Oxmoor Farms expansion (+/-2,000 cars daily by the residents/hotel/businesses), may constitute a violation of State air quality standards. I suggest you plan for routing Oxmoor Farms expansion traffic to Bunsen Way, using a cloverleaf at I-264 or I-64 WITHOUT connecting the expansion to Hurstbourne. Residents have asked, collectively and publicly for you to stop the plan for the egregious, noxious destruction of our formerly safe neighborhood. We were ignored, now, we are asking in writing.

Kentucky has a law preventing destruction of wildlife habitat, specifically, that of nesting, protected birds of prey. One such habitat and two large churches properties will be impacted severely by this plan. Again, we have options. Effective, workable solutions are more expensive, but we are asking you to SOLVE the problems, not make them worse.

Therefore, first solve the number one cause for Hurstbourne Parkway's traffic problems – begin by building functional ramps to service Interstate 64 and removing adjacent stoplights. Hurstbourne should remain exclusive, and any Oxmoor Farms development should also be exclusive. Please do not further damage Hurstbourne residents' health when other obvious solutions are available. Also, further expansion of Hurstbourne Parkway should be only on the Jeffersontown side of the road rather than encroaching into Hurstbourne further. Also, any plan should include effective noise protection structures on the west side of the parkway.

Please conduct appropriate due diligence, protect our wildlife, and respect our Commonwealth's air quality standards.

Regards,

Bill Zinninger
Olga Zinninger

Bill and Olga Zinninger

Comment Form

Hurstbourne Area
Transportation Study and Small Area Plan

Hurstbourne Town Meeting – November 8, 2005

Name _____ **Address** _____

Please provide any input you have on problems, specific problem locations, issues and concerns, suggestions for improvement or views you have regarding the study area.

Station 1: Planned Major Development Projects

Station 2: Planned Roadway Projects

Station 3: Possible Spot Improvement Locations

Comment Form (cont.)

Hurstbourne Area
Transportation Study and Small Area Plan

Hurstbourne Town Meeting
November 8, 2005

Please provide any input you have on problems, specific problem locations, issues and concerns, suggestions for improvement or views you have regarding the study area.

Station 4: Multimodal: Public Transit, Bicycle and Pedestrian Facilities

Station 5: Focus on Neighborhoods

Speed bumps on Nottingham Way.

Other Comments

Two schools in our neighborhood need to be important factors in the traffic study. Lutheran & Lassa Elementary.

Please place form in comment box or return comments within 15 days to Ms. Aida Copic, Project Manager, Louisville Metro Planning and Design Services, 444 South Fifth Street, 3rd Floor, Louisville, KY 40202.

Comment Form

Hurstbourne Area
Transportation Study and Small Area Plan

Hurstbourne Town Meeting – November 8, 2005

Name Tom Bardette Address 800 Oxmoor Woods. Pkwy.

Please provide any input you have on problems, specific problem locations, issues and concerns, suggestions for improvement or views you have regarding the study area.

Station 1: Planned Major Development Projects

Station 2: Planned Roadway Projects

Station 3: Possible Spot Improvement Locations

Comment Form (cont.)

Hurstbourne Area
Transportation Study and Small Area Plan

Hurstbourne Town Meeting
November 8, 2005

Please provide any input you have on problems, specific problem locations, issues and concerns, suggestions for improvement or views you have regarding the study area.

Station 4: Multimodal: Public Transit, Bicycle and Pedestrian Facilities

Station 5: Focus on Neighborhoods

Other Comments

Possible - Consideration of "Raised Pedestrian Crosswalks" To help
① access opposite side of Islands.
② Help control speeding.

Please place form in comment box or return comments within 15 days to Ms. Aida Copic, Project Manager, Louisville Metro Planning and Design Services, 444 South Fifth Street, 3rd Floor, Louisville, KY 40202.

Comment Form

Hurstbourne Area
Transportation Study and Small Area Plan

Hurstbourne Town Meeting – November 8, 2005

Name GLORIA CARL Address 10040 XMOOR WPS PKY

Please provide any input you have on problems, specific problem locations, issues and concerns, suggestions for improvement or views you have regarding the study area.

Station 1: Planned Major Development Projects

Station 2: Planned Roadway Projects

No road extentions into (or connecting) the Hurstbourne City with the Oxmoor Project

Station 3: Possible Spot Improvement Locations

Comment Form (cont.)

Hurstbourne Area
Transportation Study and Small Area Plan

Hurstbourne Town Meeting
November 8, 2005

Please provide any input you have on problems, specific problem locations, issues and concerns, suggestions for improvement or views you have regarding the study area.

Station 4: Multimodal: Public Transit, Bicycle and Pedestrian Facilities

I do not want public transit on the streets of Hurstbourne that are residential – just the commercial property

Station 5: Focus on Neighborhoods

Other Comments

Please place form in comment box or return comments within 15 days to Ms. Aida Copic, Project Manager, Louisville Metro Planning and Design Services, 444 South Fifth Street, 3rd Floor, Louisville, KY 40202.

Comment Form

Hurstbourne Area
Transportation Study and Small Area Plan

Hurstbourne Town Meeting – November 8, 2005

Name Court Clayton Address 8215 Cumberland Drive

Please provide any input you have on problems, specific problem locations, issues and concerns, suggestions for improvement or views you have regarding the study area.

Station 1: Planned Major Development Projects

Left turn from Hurstbourne South to I64 West is still a bottleneck. Find another way to accomplish that.

Station 2: Planned Roadway Projects

Station 3: Possible Spot Improvement Locations

Comment Form (cont.)

Hurstbourne Area
Transportation Study and Small Area Plan

Hurstbourne Town Meeting
November 8, 2005

Please provide any input you have on problems, specific problem locations, issues and concerns, suggestions for improvement or views you have regarding the study area.

Station 4: Multimodal: Public Transit, Bicycle and Pedestrian Facilities

Put a cloverleaf interchange where Bunsen crosses I64

Do not allow any connections between Hurstbourne & Oxmoor Farms NEVER!

Station 5: Focus on Neighborhoods

Other Comments

Please place form in comment box or return comments within 15 days to Ms. Aida Copic, Project Manager, Louisville Metro Planning and Design Services, 444 South Fifth Street, 3rd Floor, Louisville, KY 40202.

Comment Form

Hurstbourne Area
Transportation Study and Small Area Plan

Hurstbourne Town Meeting – November 8, 2005

Name Jim Wright **Address** 9001 Hurstwood Ct

Please provide any input you have on problems, specific problem locations, issues and concerns, suggestions for improvement or views you have regarding the study area.

Station 1: Planned Major Development Projects – Oxmoor Farm, subdiv

Station 2: Planned Roadway Projects

– close hurstbourne's thru Roads #1 (Linn Station + Lyndon Ln)
– remove some stop lights between Hurst + Shelbyville
have them use the access Roads to speed traffic
*ramp off I-64 or watterson on to oxmoor develop.
– do not connect bunsen blvd. with Linn Station - go straight into oxmoor development

Station 3: Possible Spot Improvement Locations

* develope Bunsen all the way first before develope

Comment Form (cont.)

Hurstbourne Area
Transportation Study and Small Area Plan

Hurstbourne Town Meeting
November 8, 2005

Please provide any input you have on problems, specific problem locations, issues and concerns, suggestions for improvement or views you have regarding the study area.

Station 4: Multimodal: Public Transit, Bicycle and Pedestrian Facilities

Station 5: Focus on Neighborhoods

Other Comments

– make lights on Hurstbourne lane so you can go thru w/o stopping

Please place form in comment box or return comments within 15 days to Ms. Aida Copic, Project Manager, Louisville Metro Planning and Design Services, 444 South Fifth Street, 3rd Floor, Louisville, KY 40202.

Comment Form

Hurstbourne Area
Transportation Study and Small Area Plan

Hurstbourne Town Meeting – November 8, 2005

Name Mike Baumer Address 402 Edinburgh

Please provide any input you have on problems, specific problem locations, issues and concerns, suggestions for improvement or views you have regarding the study area.

Station 1: Planned Major Development Projects

Please have a separate meeting for each section 1-5 where the responsible parties are available to present their project.

Station 2: Planned Roadway Projects

ADD Hiking & Biking Paths

Station 3: Possible Spot Improvement Locations

Please have a separate meeting for Linn Station area.

Comment Form (cont.)

Hurstbourne Area
Transportation Study and Small Area Plan

Hurstbourne Town Meeting
November 8, 2005

Please provide any input you have on problems, specific problem locations, issues and concerns, suggestions for improvement or views you have regarding the study area.

Station 4: Multimodal: Public Transit, Bicycle and Pedestrian Facilities

ADD Hiking & Biking Paths

Station 5: Focus on Neighborhoods

Other Comments

Please schedule another meeting to report out on an impact analysis. Include cascading effects analysis. Mitigation options.

Please place form in comment box or return comments within 15 days to Ms. Aida Copic, Project Manager, Louisville Metro Planning and Design Services, 444 South Fifth Street, 3rd Floor, Louisville, KY 40202.

Comment Form

Hurstbourne Area
Transportation Study and Small Area Plan

Hurstbourne Town Meeting – November 8, 2005

Name Mary Margaret Perry Address 8505 Cheltenham Circle

Please provide any input you have on problems, specific problem locations, issues and concerns, suggestions for improvement or views you have regarding the study area.

Station 1: Planned Major Development Projects

Station 2: Planned Roadway Projects

Station 3: Possible Spot Improvement Locations

Comment Form (cont.)

Hurstbourne Area
Transportation Study and Small Area Plan

Hurstbourne Town Meeting
November 8, 2005

Please provide any input you have on problems, specific problem locations, issues and concerns, suggestions for improvement or views you have regarding the study area.

Station 4: Multimodal: Public Transit, Bicycle and Pedestrian Facilities

Sidewalks
Police tickets, warnings for not walking curbside
Go to apartments + businesses
Need light at [redacted] Not stop side. LINK Station + Nottingham Pky

Station 5: Focus on Neighborhoods

Need sidewalks
Must get pedistrians off of roadways.
Need to advise businesses on Withington Pkwy & Lees Gate
and cross street of walking on curb side. Need police
at lunch hour.
Need police at 6AM to tell joggers to go single file. Deaths
will occur.
Sidewalks in Hurstbourne Mandatory

Other Comments

Please place form in comment box or return comments within 15 days to Ms. Aida Copic, Project Manager, Louisville Metro Planning and Design Services, 444 South Fifth Street, 3rd Floor, Louisville, KY 40202.

Comment Form

Hurstbourne Area
Transportation Study and Small Area Plan

Hurstbourne Town Meeting – November 8, 2005

Name _____ Address _____

Please provide any input you have on problems, specific problem locations, issues and concerns, suggestions for improvement or views you have regarding the study area.

Station 1: Planned Major Development Projects

Station 2: Planned Roadway Projects

Station 3: Possible Spot Improvement Locations

Left turn from Shelbyville Rd (headed out) onto North Hurstbourne Pkwy bad.

Comment Form (cont.)

Hurstbourne Area
Transportation Study and Small Area Plan

Hurstbourne Town Meeting
November 8, 2005

Please provide any input you have on problems, specific problem locations, issues and concerns, suggestions for improvement or views you have regarding the study area.

Station 4: Multimodal: Public Transit, Bicycle and Pedestrian Facilities

Pedestrian interests sadly lacking. One risks one's life trying to walk in many areas - no sidewalk and no crosswalks.

Station 5: Focus on Neighborhoods

Other Comments

Please place form in comment box or return comments within 15 days to Ms. Aida Copic, Project Manager, Louisville Metro Planning and Design Services, 444 South Fifth Street, 3rd Floor, Louisville, KY 40202.

Comment Form

Hurstbourne Area
Transportation Study and Small Area Plan

Hurstbourne Town Meeting – November 8, 2005

Name Cindy Thomas **Address** 8611 Blackpool Dr.

Please provide any input you have on problems, specific problem locations, issues and concerns, suggestions for improvement or views you have regarding the study area.

Station 1: Planned Major Development Projects

Station 2: Planned Roadway Projects

Connecting Bunsen Way to Bowling Blvd + Shelbyville Rd. is a good idea + needed. There is no reason to ~~connect~~ have a road running parallel to Oxmoor Woods Pkwy connecting Linn Station. Don't have any additional roads to connect to the new development.

Station 3: Possible Spot Improvement Locations

Comment Form (cont.)

Hurstbourne Area
Transportation Study and Small Area Plan

Hurstbourne Town Meeting
November 8, 2005

Please provide any input you have on problems, specific problem locations, issues and concerns, suggestions for improvement or views you have regarding the study area.

Station 4: Multimodal: Public Transit, Bicycle and Pedestrian Facilities

Station 5: Focus on Neighborhoods

Other Comments

Please place form in comment box or return comments within 15 days to Ms. Alda Copic, Project Manager, Louisville Metro Planning and Design Services, 444 South Fifth Street, 3rd Floor, Louisville, KY 40202.

Comment Form

Hurstbourne Area
Transportation Study and Small Area Plan

Hurstbourne Town Meeting – November 8, 2005

Name Sharon K. Dreller Address 8810 Linn Station

Please provide any input you have on problems, specific problem locations, issues and concerns, suggestions for improvement or views you have regarding the study area.

Station 1: Planned Major Development Projects

I know we cannot stop development of Oxmoor Farm, but we can do something about the cut thru traffic & safety of our neighborhood

Station 2: Planned Roadway Projects

All roads from residential areas to be cut off to Oxmoor development. Petition to change Linn Station to residential rather than public.

Station 3: Possible Spot Improvement Locations

If Linn Station is not cut off people will continue to cut through our neighborhood thru Lyndon Lane and many other roads. All roads need to be cut off

Comment Form (cont.)

Hurstbourne Area
Transportation Study and Small Area Plan

Hurstbourne Town Meeting
November 8, 2005

Please provide any input you have on problems, specific problem locations, issues and concerns, suggestions for improvement or views you have regarding the study area.

Station 4: Multimodal: Public Transit, Bicycle and Pedestrian Facilities

Station 5: Focus on Neighborhoods

We are a neighborhood and want to remain one. With all the development in Oxmoor we will lose our neighborhood as residential

Other Comments

To open even one street will create a big impact on traffic problems & property values

Please place form in comment box or return comments within 15 days to Ms. Aida Copic, Project Manager, Louisville Metro Planning and Design Services, 444 South Fifth Street, 3rd Floor, Louisville, KY 40202.

Comment Form

Hurstbourne Area
Transportation Study and Small Area Plan

Hurstbourne Town Meeting – November 8, 2005

Name Bob Clem Address 9314 Lynn Station Rd

Please provide any input you have on problems, specific problem locations, issues and concerns, suggestions for improvement or views you have regarding the study area.

Station 1: Planned Major Development Projects

Don't Connect Lynn Station to the Shopping Center. Put New Roads for the Center and keep Lynn Station Lane open to Shelbyville Road for Residents Only. Put New roads on Shelbyville Road for Center N Cut Through

Station 2: Planned Roadway Projects

Station 3: Possible Spot Improvement Locations

Comment Form (cont.)

Hurstbourne Area
Transportation Study and Small Area Plan

Hurstbourne Town Meeting
November 8, 2005

Please provide any input you have on problems, specific problem locations, issues and concerns, suggestions for improvement or views you have regarding the study area.

Station 4: Multimodal: Public Transit, Bicycle and Pedestrian Facilities

Station 5: Focus on Neighborhoods

Other Comments

Please place form in comment box or return comments within 15 days to Ms. Aida Copic, Project Manager, Louisville Metro Planning and Design Services, 444 South Fifth Street, 3rd Floor, Louisville, KY 40202.

November 12, 2005

Julie:

Thanks for facilitating the meeting this past week. You did a good job of trying to keep it moving and in a positive/constructive way. Some in attendance had unrealistic expectations, and wanted to take it out on anyone who looked "official", that's for sure! And I understand your frustration of having to live with a decision that preceded your authority in office.

I am mailing these comments to Aida Copic at Louisville Metro Planning and Design, but thought I would share them with you. If Cynthia and I can be of any assistance to you, give us a call.

Here are some thoughts and suggestions:

(1) Surely no reasonable person wants to throw more traffic onto Hurstbourne Lane south of Shelbyville Road and north of Taylorsville Road. On most days, this area is backed up all the way to Harpers and beyond anytime after 4:00 p.m. I suspect this is in part to the rapid development of the area north of Shelbyville, as this remains the only viable southern route to I-64 and down into J-town. Traffic going west from this area would turn left onto Shelbyville Road to the Watterson. So all the southern traffic on Hurstbourne south of Shelbyville Road for the most part is going east on I-64, or east down into J-town area. Perhaps an informational campaign with the hotels and businesses in his newer north Hurstbourne Lane area to use Dorsey Lane/Moser Road/Blankenbaker as better routes to I-64 east and into J-town would help the traffic flow?

(2) Do not allow the connector roads in Hurstbourne to be connected.

(3) Do not allow/approve the development until the Bunsen extension bridge over I-64 is completed and open (wasn't this a binding element of beginning the project anyway?) Also, would it be possible to add a ramp to I-64 east as a part of this bridge? That would certainly help I-64 and Hurstbourne lane area.

(4) Complete Christian Way into the development as planned. Then CLOSE OFF Christian Way at the Farm so as to not allow entrance into Oxmoor Woods, or access to Lyndon Lane from that curved road around the soccer fields. Simply close it off.

(5) Consider switching the center turn lane on Shelbyville Road to one way in and out of town at busy rush hour times. This would give you one more functional lane at the time of greatest need (this is the system in place on Bardstown Road in the city now).

(6) Insist on widening of Shelbyville Road prior to project initiating.

RECEIVED

NOV 16 2005

PLANNING & DESIGN SERVICES

(7) If you do not allow the connectors (see 1 above), this would force more traffic onto Linn Station Road. We may need to "sacrifice" Linn Station Road for the better of the whole neighborhood!

(8) If Linn Station road is widened, by all means keep the median for aesthetics. Put in speed bumps and traffic strips to slow the traffic

(9) Close Oxmoor Woods Parkway at Linn Station Road

(10) Do consider the gated community idea, at least for Oxmoor Woods if not for the entire area.

(11) Closing Christian Way at the soccer fields (after it is extended as planned into the development), and not allowing the connectors to be connected, will dramatically reduce traffic on the west side of our area, and throughout the entire city of Hurstbourne.

(12) Meet with city officials from Anchorage and Audubon Park to see what approaches they have taken. Especially in the case of Audubon Park, they have had a reputation over the years of being a "speed trap." I know several people who avoid that area since they are known to not be traffic friendly, and the local officers are very aggressive about ticketing.

(13) Dramatically increase traffic patrols and signage. Related to #12, if we create the environment that we are not traffic friendly, perhaps some/many will avoid the area.

(14) Will the impact of increased pollution have any impact on the feasibility of the project going through? If the area is already high in pollution, could this be used as a pressure point to stop/amend the development project(s) significantly?

Mike and Cynthia Smith
1101 Oxmoor Woods Parkway
40222 (cell phone 664-2454)

Comment Form

Hurstbourne Area
Transportation Study and Small Area Plan

339-1503

Cheryl +

Hurstbourne Town Meeting – November 8, 2005

Name David Franck II **Address** 210 Nottingham Pkwy

Please provide any input you have on problems, specific problem locations, issues and concerns, suggestions for improvement or views you have regarding the study area.

Station 1: Planned Major Development Projects

Stop the cut through Traffic How

By Stopping the Development coming Surprise
It's Already being Developed

Station 2: Planned Roadway Projects

Many residents I've talked to would like ~~Gated~~ A Gated Community study
Many would like to petition ~~or just change~~ to change the Shelby Campus Pkwy
Stop It / Stop the Linn Station Access
What do we do to stop the thru traffic,

please start one

Station 3: Possible Spot Improvement Locations

Build Bunsen Pkwy Built through to Oxmoor Farms / ReDirect Christian Way to Bunsen Pkwy

Comment Form (cont.)

Hurstbourne Area
Transportation Study and Small Area Plan

Hurstbourne Town Meeting
November 8, 2005

Please provide any input you have on problems, specific problem locations, issues and concerns, suggestions for improvement or views you have regarding the study area.

Station 4: Multimodal: Public Transit, Bicycle and Pedestrian Facilities

This is Assuming we Are happy this situation is taking place. We Are not happy. We do not need to Accommodate the traffic

Station 5: Focus on Neighborhoods

Yes focus on OUR neighborhood We are the investors How would you feel if Thousands of car trips are invited into your neighborhood

Other Comments

Start the Process to get Linn Station Rd made into A City of Hurstbourne Rd NOT A County Thru Road.

~~Start~~ A plan to see what if we Gated How ?? Ideas outside the box

Please place form in comment box or return comments within 15 days to Ms. Aida Copic, Project Manager, Louisville Metro Planning and Design Services, 444 South Fifth Street, 3rd Floor, Louisville, KY 40202.

Start plans to Redirect the traffic outside of the Peninsula.

COPY FOR GSP

12/06/05

Comment Form

Hurstbourne Area
Transportation Study and Small Area Plan

Hurstbourne Town Meeting – November 8, 2005

Name Lynn Hagelson Address 8302 Chenlee Way, 40222

Please provide any input you have on problems, specific problem locations, issues and concerns, suggestions for improvement or views you have regarding the study area.

Station 1: Planned Major Development Projects

• no more changes in zoning or development should proceed in the specified area until it can be determined that "corrections" have been

• I-64 narrows from 4-5 lanes to 2 lanes with exit lagging @ Hurstbourne – needs to be wider ~~to move traffic~~ throughout to Watterson – will carry more traffic especially from Hurstbourne home

Station 2: Planned Roadway Projects

• Doesn't specially discuss impact of Ul Shelby new entryway to Watterson Way. Ollemeg should be considered if direct entry can't be blocked. Stop lights must be programmed for the entire SV Rd / Hurst B. Pky corridor. Burnsen Parkway extension will be costly – the only ones who benefit for this project are the Bullitt family members.

Station 3: Possible Spot Improvement Locations

• Christian Way – SV Rd light – I monitored for 2-3 0 day periods. On 17 and 18 days East traffic ran the red light (70-80%) when sole. Cars are increasing speed Bound to make up time lost @ School zone. • See map for suggested improvements to area designed • Hupp meals corridor should be open extended to for pre access to Shopping center and Assisted Living

see detailed map (in pink)

Comment Form (cont.)

Hurstbourne Area
Transportation Study and Small Area Plan

Hurstbourne Town Meeting
November 8, 2005

RECEIVED
DEC 06 2005
PLANNING & DESIGN SERVICES

Please provide any input you have on problems, specific problem locations, issues and concerns, suggestions for improvement or views you have regarding the study area.

Station 4: Multimodal: Public Transit, Bicycle and Pedestrian Facilities

Taxi Stop in Oxmoor SV Rd area not discussed – Can a pull in area be developed to prevent traffic backups when passenger entering/exit bus.

Station 5: Focus on Neighborhoods

* • BFD development should not be allowed to proceed in its development until its infrastructure can supports its buildout (roadways). BFD should be developed to completely support its entire buildout. Don't Build any phase until all exit/entry access is complete.

Other Comments

• Development of Bullitt Farm will lead to increased use of Hurstbourne Street – How can we assess them for street we own and must upkeep? Toll Road for entry if street cannot be closed. • Use Speed Pass type car deals to speed access. • Hard will

• Building Equipment / traffic must have defined routing and not through Hurstbourne

Please place form in comment box or return comments within 15 days to Ms. Aida Copic, Project Manager, Louisville Metro Planning and Design Services, 444 South Fifth Street, 3rd Floor, Louisville, KY 40202.

Make connection

Close ~~alms~~ street as many as possible

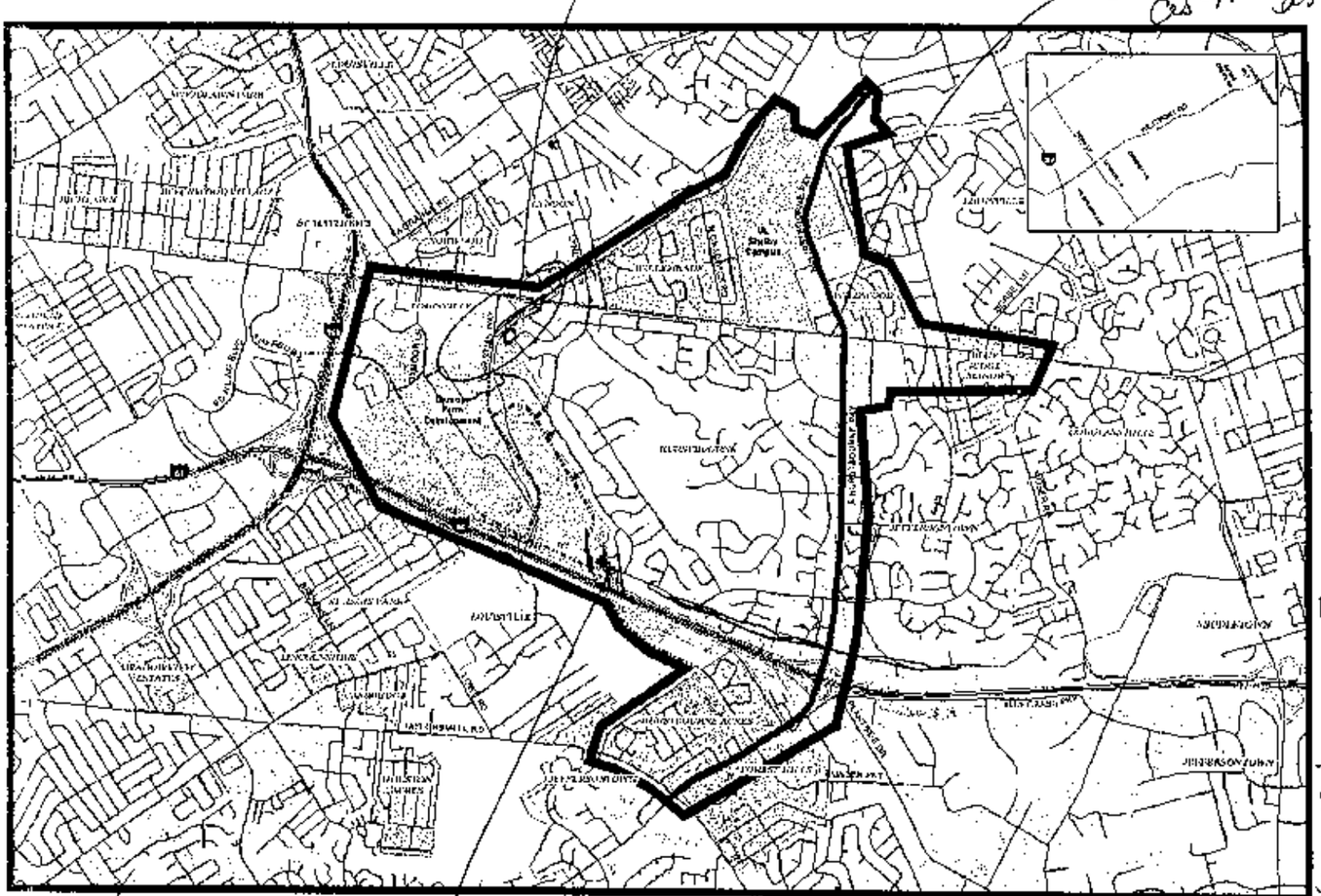

Review Tab 4 based Road Name from 4-5 lanes after gene separation to only 2 @ waterson There will at

delete connection

Hurstbourne Area Transportation Study and Small Area Plan

NOT TO SCALE

Legend

Keep bea bottleneck unless area in park has more lanes

Comment Form

RECEIVED
NOV 21

Hurstbourne Area
Transportation Study and Small Area Plan

Hurstbourne Town Meeting – November 8, 2005

Name BOB BLACK Address 815 BERRYSHIRE RD., 40222

Please provide any input you have on problems, specific problem locations, issues and concerns, suggestions for improvement or views you have regarding the study area.

Station 1: Planned Major Development Projects

Station 2: Planned Roadway Projects

CONVERT LINN STATION RD. FROM COUNTY OWNED TO HURSTBOURNE CITY OWNED. WE MUST PREVENT TRAFFIC FROM COMING INTO OXMOOR WOODS. THIS CAN BE DONE BY ① CONNECT LYNDON LANE TO OXMOOR WOODS PKWY AND BLOCK OF CHRISTIAN WAY FROM OXMOOR WOOD PKWY. ② CONNECT LINN STATION RD DIRECTLY TO OXMOOR WOODS PKWY + DON'T EXTEND LINN STATION RD. BEYOND THIS INTERSECTION. TRAFFIC WOULD NOT BE ABLE TO ACCESS THESE ROADS AND CUTTING THROUGH WOULD BE REDUCED BECAUSE NOT MUCH TIME COULD BE SAVED. PUT SPEED BUMPS IN STRATEGIC LOCATIONS TO SLOW TRAFFIC.

Station 3: Possible Spot Improvement Locations

Comment Form (cont.)

Hurstbourne Area
Transportation Study and Small Area Plan

Hurstbourne Town Meeting
November 8, 2005

Please provide any input you have on problems, specific problem locations, issues and concerns, suggestions for improvement or views you have regarding the study area.

Station 4: Multimodal: Public Transit, Bicycle and Pedestrian Facilities

Station 5: Focus on Neighborhoods

Other Comments

Please place form in comment box or return comments within 15 days to Ms. Aida Copic, Project Manager, Louisville Metro Planning and Design Services, 444 South Fifth Street, 3rd Floor, Louisville, KY 40202.

BLOCK OFF HERE

DRIVERS WOULD NOT USE THE SHADRO ROAD FOR A CUT THROUGH BECAUSE THERE WON'T BE ANY CONNECTOR ROADS.

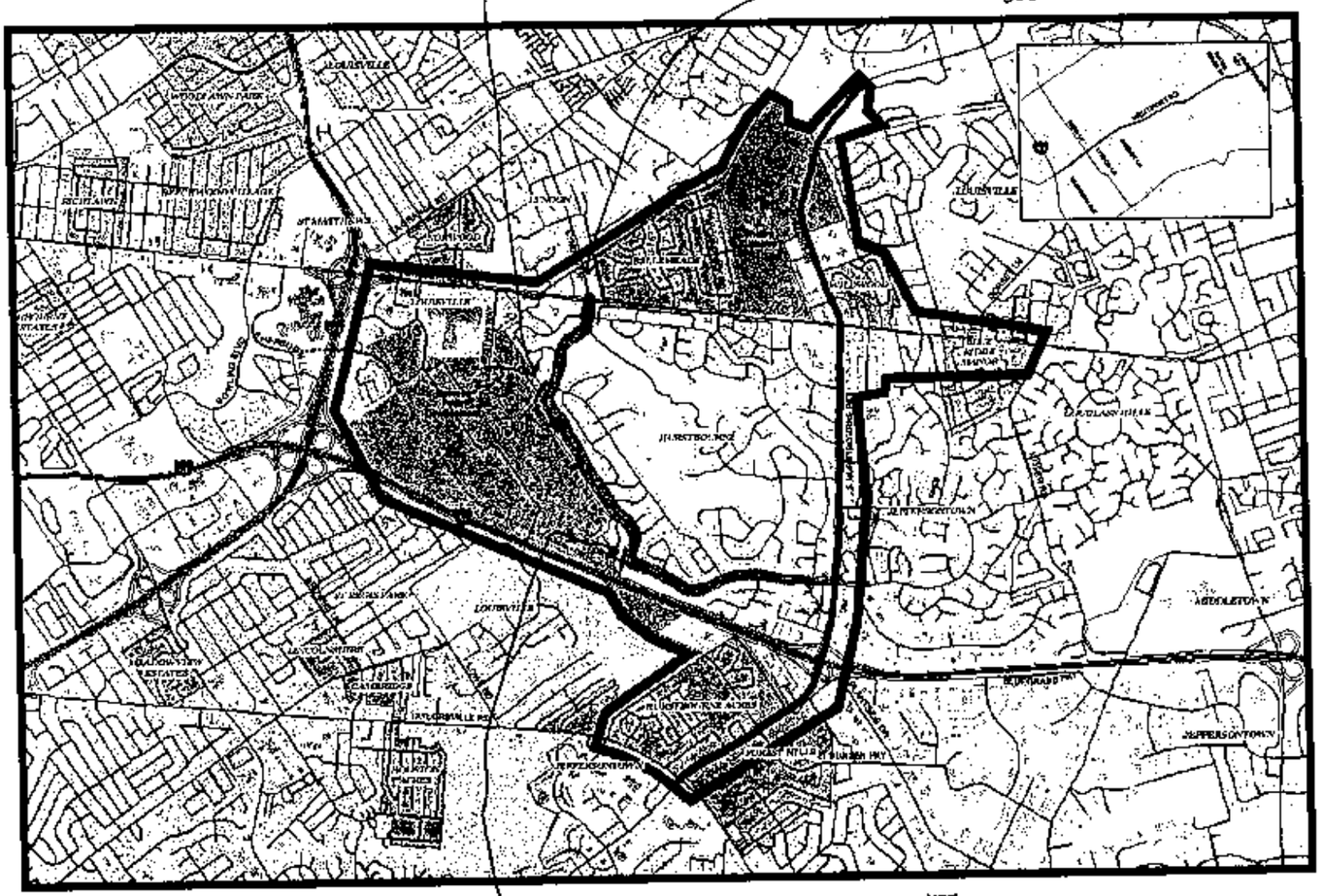

NOT TO SCALE

Hurstbourne Area Transportation Study and Small Area Plan

Legend

DON'T EXTEND HERE

APPENDIX B

Tube Count Summaries

CHRIST.TXT

01/24/06 Gresham, Smith and Partners Page: 1
11:26:03 101 South Fifth Street Suite 1400
Louisville, KY 40202
(502) 627-8900

*** Dual Channel 15 Minute ***

Site ID : CHRISTIAN Date : Nov 17, 2005 Thu
Info 1 : EB Factor : 1.00
Info 2 : WB

Lane 1-Lane Subtract, Axle, /2 Lane 2-Lane Subtract, Axle, /2

Nov 17, 2005 Thu

Hour Starts	1-EB 0	15	30	45	Hour Total	2-WB 0	15	30	45	Hour Total	Combined Total
AM											
12	6	1	1	2	10	5	0	1	2	8	18
1	0	1	1	1	3	0	1	0	0	1	4
2	0	1	1	0	2	0	0	0	0	0	2
3	0	0	0	0	0	0	0	1	0	1	1
4	1	1	0	2	4	0	0	1	2	3	7
5	0	0	5	1	6	0	2	4	4	10	16
6	0	1	1	3	5	3	1	9	20	33	38
7	3	8	14	27	52	27	40	51	51	169	221
8	30	19	21	21	91	41	29	34	50	154	245
9	15	13	11	16	55	34	27	36	34	131	186
10	8	26	20	22	76	28	17	32	37	114	190
11	20	38	29	50	137	27	42	43	52	164	301
PM											
12	45	45	32	53	175	40	53	53	40	186	361
1	46	46	56	38	186	47	42	36	34	159	345
2	47	37	47	72	203	32	30	35	18	115	318
3	80	50	61	66	257	23	36	29	24	112	369
4	63	64	64	60	251	23	40	37	51	151	402
5	86	93	115	104	398	57	84	86	74	301	699
6	106	59	44	44	253	49	38	36	28	151	404
7	32	43	48	42	165	29	28	15	23	95	260
8	45	35	36	27	143	23	15	10	9	57	200
9	41	41	19	19	120	4	4	10	2	20	140
10	12	14	6	7	39	4	5	1	1	11	50
11	8	11	1	5	25	3	2	1	3	9	34
TOTALS		55%			2656		45%			2155	4811
AVERAGE		27.7 period			110.7		22.4 period			89.8	200.5

Peak AM Hour is *** 11:00am to 12:00pm ***
Volume Lane 1 : 137 Lane 2 : 164 Combined: 301
Directional Split : 46% 54%
Peak Hour Factor : 0.685 0.788 0.738
Peak / Day Total : 0.052 0.076 0.063

Peak PM Hour is *** 5:15pm to 6:15pm ***
Volume Lane 1 : 418 Lane 2 : 293 Combined: 711
Directional Split : 59% 41%
Peak Hour Factor : 0.909 0.852 0.884
Peak / Day Total : 0.157 0.136 0.148

WHIPPS.TXT

01/24/06 Gresham, Smith and Partners Page: 1
11:25:42 101 South Fifth Street Suite 1400
Louisville, KY 40202
(502) 627-8900

*** Dual Channel 15 Minute ***

Site ID : SO WHIPPS MILL Date : Nov 10, 2005 Thu
Info 1 : NB Factor : 1.00
Info 2 : SB

Lane 1-Lane Subtract, Axle, /2 Lane 2-Lane Subtract, Axle, /2

Nov 10, 2005 Thu

Hour Starts	1-NB 0	15	30	45	Hour Total	2-SB 0	15	30	45	Hour Total	Combined Total
AM											
12	0	2	0	0	2	0	0	0	0	0	2
1	0	0	0	0	0	0	0	0	0	0	0
2	0	0	0	0	0	0	0	0	0	0	0
3	0	0	0	1	1	0	0	0	1	1	2
4	0	0	0	1	1	0	0	0	0	0	1
5	2	0	0	1	3	0	0	0	0	0	3
6	0	0	2	1	3	1	0	1	2	4	7
7	0	1	5	6	12	1	1	2	1	5	17
8	8	23	2	0	33	5	14	0	0	19	52
9	1	1	1	0	3	0	1	1	0	2	5
10	5	4	3	4	16	2	0	2	2	6	22
11	2	4	2	0	8	2	2	2	1	7	15
PM											
12	4	3	3	3	13	2	3	1	0	6	19
1	1	4	3	7	15	2	3	1	2	8	23
2	1	7	9	4	21	1	3	3	4	11	32
3	11	12	5	1	29	7	4	4	1	16	45
4	1	5	8	9	23	1	4	4	7	16	39
5	6	7	3	6	22	5	6	5	5	21	43
6	4	6	2	4	16	2	5	2	1	10	26
7	4	4	0	1	9	5	2	0	2	9	18
8	3	7	10	0	20	2	4	1	0	7	27
9	2	1	3	0	6	1	1	2	0	4	10
10	0	0	0	0	0	0	0	0	0	0	0
11	0	1	1	1	3	1	1	1	0	3	6
TOTALS		63%			259		37%			155	414
AVERAGE		2.7 period			10.8		1.6 period			6.5	17.3

Peak AM Hour is *** 7:30am to 8:30am ***
Volume Lane 1 : 42 Lane 2 : 22 Combined: 64
Directional Split : 66% 34%
Peak Hour Factor : 0.457 0.393 0.432
Peak / Day Total : 0.163 0.142 0.155

Peak PM Hour is *** 2:30pm to 3:30pm ***
Volume Lane 1 : 36 Lane 2 : 18 Combined: 54
Directional Split : 67% 33%
Peak Hour Factor : 0.750 0.643 0.750
Peak / Day Total : 0.140 0.116 0.131

LYNDON.TXT

01/24/06 Gresham, Smith and Partners Page: 1
11:24:48 101 South Fifth Street Suite 1400
Louisville, KY 40202
(502) 627-8900

*** Dual Channel 15 Minute ***

Site ID : SO LYNDON
Info 1 : SB
Info 2 : NB

Date : Nov 10, 2005 Thu
Factor : 1.00

Lane 1-Normal, Axle, /2 Lane 2-Normal, Axle, /2

Nov 10, 2005 Thu

Hour Starts	1-SB 0	15	30	45	Hour Total	2-NB 0	15	30	45	Hour Total	Combined Total
AM											
12	1	1	4	2	8	1	2	1	0	4	12
1	2	0	2	4	8	2	0	0	0	2	10
2	1	0	0	0	1	1	0	0	2	3	4
3	0	0	1	2	3	0	0	1	0	1	4
4	1	1	1	0	3	0	0	1	2	3	6
5	0	2	0	2	4	1	3	3	3	10	14
6	0	5	3	13	21	2	10	12	20	44	65
7	9	18	28	38	93	28	46	77	75	226	319
8	42	61	61	69	233	53	84	71	86	294	527
9	29	24	30	34	117	50	44	27	26	147	264
10	30	24	17	19	90	30	46	38	35	149	239
11	16	24	24	33	97	33	26	31	42	132	229
PM											
12	29	28	30	24	111	36	34	32	32	134	245
1	29	24	21	15	89	43	34	31	34	142	231
2	28	27	24	38	117	41	41	42	33	157	274
3	57	62	32	45	196	36	65	49	65	215	411
4	34	30	39	41	144	63	36	51	43	193	337
5	43	52	61	56	212	76	57	74	61	268	480
6	45	37	29	22	133	55	32	25	28	140	273
7	28	22	18	26	94	24	12	17	16	69	163
8	11	5	23	22	61	24	14	18	25	81	142
9	14	11	10	4	39	16	30	19	13	78	117
10	4	4	5	3	16	7	8	10	2	27	43
11	8	4	2	2	16	2	0	2	1	5	21
TOTALS	43%				1906	57%				2524	4430
AVERAGE	19.9 period				79.4	26.3 period				105.2	184.6

Peak AM Hour is *** 8:00am to 9:00am ***

Volume Lane 1 :	233	Lane 2 : 294	Combined: 527
Directional Split :	44%	56%	
Peak Hour Factor :	0.844	0.855	0.850
Peak / Day Total :	0.122	0.116	0.119

Peak PM Hour is *** 5:00pm to 6:00pm ***

Volume Lane 1 :	212	Lane 2 : 268	Combined: 480
Directional Split :	44%	56%	
Peak Hour Factor :	0.869	0.882	0.889
Peak / Day Total :	0.111	0.106	0.108

SHAFT.TXT

01/24/06 Gresham, Smith and Partners Page: 1
11:25:27 101 South Fifth Street Suite 1400
Louisville, KY 40202
(502) 627-8900

*** Dual Channel 15 Minute ***

Site ID : SHAFTESBURY
Info 1 : NB
Info 2 : SB

Date : Nov 9, 2005 Wed
Factor : 1.00

Lane 1-Lane Subtract, Axle, /2 Lane 2-Lane Subtract, Axle, /2

Nov 9, 2005 Wed

Hour Starts	1-NB 0	15	30	45	Hour Total	2-SB 0	15	30	45	Hour Total	Combined Total
AM											
12	1	2	2	0	5	1	2	0	0	3	8
1	0	0	1	0	1	0	0	1	0	1	2
2	0	0	0	0	0	0	0	0	0	0	0
3	0	0	0	0	0	0	0	1	0	1	1
4	0	0	1	0	1	0	0	0	0	0	1
5	1	3	2	2	8	1	1	0	1	3	11
6	0	2	3	6	11	0	1	0	1	2	13
7	8	9	4	9	30	5	2	3	6	16	46
8	8	17	12	17	54	7	17	4	8	36	90
9	3	7	8	7	25	3	5	2	4	14	39
10	1	5	8	4	18	1	3	5	6	15	33
11	12	19	7	9	47	6	7	1	6	20	67
PM											
12	6	5	4	0	15	6	6	3	2	17	32
1	8	3	4	1	16	2	2	5	3	12	28
2	6	8	12	11	37	5	5	3	4	17	54
3	6	13	12	12	43	10	9	6	5	30	73
4	11	8	6	14	39	5	8	4	5	22	61
5	11	12	9	8	40	8	16	5	5	34	74
6	13	10	5	6	34	7	5	5	3	20	54
7	0	6	7	7	20	4	6	6	2	18	38
8	5	6	4	7	22	2	3	2	2	9	31
9	9	8	7	8	32	2	5	8	2	17	49
10	4	0	0	3	7	0	1	2	1	4	11
11	7	0	0	0	7	2	1	0	0	3	10
TOTALS	62%				512	38%				314	826
AVERAGE	5.3 period				21.3	3.3 period				13.1	34.4

Peak AM Hour is *** 8:00am to 9:00am ***

Volume Lane 1 :	54	Lane 2 : 36	Combined: 90
Directional Split :	60%	40%	
Peak Hour Factor :	0.794	0.529	0.662
Peak / Day Total :	0.105	0.115	0.109

Peak PM Hour is *** 4:45pm to 5:45pm ***

Volume Lane 1 :	46	Lane 2 : 34	Combined: 80
Directional Split :	58%	43%	
Peak Hour Factor :	0.821	0.531	0.714
Peak / Day Total :	0.090	0.108	0.097

CHADWICK.TXT

01/24/06 Gresham, Smith and Partners Page: 1
11:25:12 101 South Fifth Street Suite 1400
Louisville, KY 40202
(502) 627-8900

*** Dual Channel 15 Minute ***

Site ID : CHADWICK Date : Nov 8, 2005 Tue
Info 1 : SB Factor : 1.00
Info 2 : NB

Lane 1-Lane Subtract, Axle, /2 Lane 2-Lane Subtract, Axle, /2

Nov 8, 2005 Tue

Hour	1-SB				Hour	2-NB				Hour	Combined
Starts	0	15	30	45	Total	0	15	30	45	Total	Total
AM											
12	2	0	0	0	2	1	0	0	0	1	3
1	0	1	0	0	1	0	0	0	0	0	1
2	1	1	0	0	2	0	0	0	0	0	2
3	1	1	1	0	3	0	0	0	0	0	3
4	0	0	0	1	1	1	0	0	1	2	3
5	0	1	0	1	2	0	0	3	1	4	6
6	1	1	2	2	6	2	0	0	1	3	9
7	11	8	14	14	47	5	5	4	9	23	70
8	17	22	13	7	59	10	6	4	8	28	87
9	9	7	5	8	29	8	10	5	7	30	59
10	13	13	5	12	43	1	4	4	5	14	57
11	7	8	7	9	31	5	8	11	5	29	60
PM											
12	19	12	18	11	60	5	3	11	9	28	88
1	10	9	14	11	44	6	6	4	6	22	66
2	4	9	7	9	29	9	4	8	6	27	56
3	9	14	17	11	51	5	7	9	9	30	81
4	16	6	16	23	61	5	7	3	9	24	85
5	30	15	19	16	80	6	9	10	10	35	115
6	19	11	13	20	63	8	6	10	5	29	92
7	8	6	7	7	28	5	4	4	0	13	41
8	7	8	9	5	29	5	4	4	2	15	44
9	3	5	1	6	15	6	2	2	0	10	25
10	2	2	3	1	8	0	2	3	0	5	13
11	1	2	0	0	3	1	0	1	2	4	7
TOTALS	65%				697	35%				376	1073
AVERAGE	7.3 period				29.0	3.9 period				15.7	44.7

Peak AM Hour is *** 7:30am to 8:30am ***
Volume Lane 1 : 67 Lane 2 : 29 Combined: 96
Directional Split : 70% 30%
Peak Hour Factor : 0.761 0.725 0.857
Peak / Day Total : 0.097 0.078 0.090

Peak PM Hour is *** 4:45pm to 5:45pm ***
Volume Lane 1 : 87 Lane 2 : 34 Combined: 121
Directional Split : 72% 28%
Peak Hour Factor : 0.725 0.850 0.840
Peak / Day Total : 0.126 0.091 0.114

LEES.TXT

01/24/06 Gresham, Smith and Partners Page: 1
11:24:05 101 South Fifth Street Suite 1400
Louisville, KY 40202
(502) 627-8900

*** Dual Channel 15 Minute ***

Site ID : LEES GATE Date : Nov 8, 2005 Tue
Info 1 : WB Factor : 1.00
Info 2 : EB

Lane 1-Normal, Axle, /2 Lane 2-Normal, Axle, /2

Nov 8, 2005 Tue

Hour	1-WB				Hour	2-EB				Hour	Combined
Starts	0	15	30	45	Total	0	15	30	45	Total	Total
AM											
12	1	0	2	0	3	0	0	1	1	2	5
1	0	0	0	1	1	0	0	0	0	0	1
2	0	0	0	0	0	0	0	0	0	0	0
3	0	0	0	0	0	0	0	0	0	0	0
4	0	0	0	0	0	0	0	0	1	1	1
5	0	0	0	0	0	2	0	0	2	4	4
6	2	1	3	4	10	2	0	8	6	16	26
7	0	4	7	3	14	11	19	29	38	97	111
8	6	13	16	12	47	30	38	30	20	118	165
9	15	10	7	15	47	13	16	9	14	52	99
10	16	18	11	12	57	20	19	14	12	65	122
11	13	17	30	17	77	17	11	16	20	64	141
PM											
12	16	28	15	22	81	20	18	30	13	81	162
1	29	25	24	18	96	26	25	35	22	108	204
2	20	25	19	16	80	36	26	12	19	93	173
3	19	21	30	21	91	14	23	28	18	83	174
4	21	37	59	33	150	24	17	19	14	74	224
5	98	44	48	28	218	27	22	24	18	91	309
6	23	20	18	23	84	22	17	19	15	73	157
7	17	13	17	14	61	16	11	7	9	43	104
8	8	6	8	9	31	6	7	4	5	22	53
9	3	6	3	3	15	3	0	4	2	9	24
10	2	5	1	1	9	2	0	1	1	4	13
11	1	0	0	0	1	0	0	0	0	0	1
TOTALS	52%				1173	48%				1100	2273
AVERAGE	12.2 period				44.7	11.5 period				45.8	94.7

Peak AM Hour is *** 7:45am to 8:45am ***
Volume Lane 1 : 38 Lane 2 : 136 Combined: 174
Directional Split : 22% 78%
Peak Hour Factor : 0.594 0.895 0.853
Peak / Day Total : 0.033 0.124 0.077

Peak PM Hour is *** 4:30pm to 5:30pm ***
Volume Lane 1 : 234 Lane 2 : 82 Combined: 316
Directional Split : 74% 26%
Peak Hour Factor : 0.597 0.759 0.632
Peak / Day Total : 0.201 0.075 0.140

SEATON.TXT

01/24/06 Gresham, Smith and Partners Page: 1
11:24:30 101 South Fifth Street Suite 1400
Louisville, KY 40202
(502) 627-8900

*** Dual Channel 15 Minute ***

Site ID : SEATON SPRINGS Date : Nov 9, 2005 Wed
Info 1 : WB Factor : 1.00
Info 2 : EB

Lane 1-Normal, Axle, /2 Lane 2-Normal, Axle, /2

Nov 9, 2005 Wed

Hour Starts	1-WB 0	15	30	45	Hour Total	2-EB 0	15	30	45	Hour Total	Combined Total
AM											
12	1	0	0	0	1	1	0	1	0	2	3
1	0	0	1	0	1	0	0	0	0	0	1
2	1	0	0	0	1	0	0	0	0	0	1
3	0	0	0	1	1	0	0	1	0	1	2
4	0	0	0	0	0	0	2	1	0	3	3
5	0	0	1	5	6	0	1	2	0	3	9
6	2	9	6	10	27	5	2	3	9	19	46
7	12	20	19	32	83	13	10	16	14	53	136
8	29	24	36	36	125	12	10	23	23	68	193
9	20	17	25	15	77	15	5	12	16	48	125
10	18	15	13	18	64	12	16	7	13	48	112
11	12	19	17	17	65	7	19	12	21	59	124
PM											
12	18	20	17	25	80	15	22	13	11	61	141
1	18	19	18	11	66	25	9	13	16	63	129
2	21	20	14	26	81	16	11	19	10	56	137
3	21	22	19	33	95	16	18	17	19	70	165
4	22	13	26	31	92	17	11	14	7	49	141
5	34	35	37	25	131	22	12	17	17	68	199
6	26	21	11	19	77	13	10	12	12	47	124
7	12	13	9	13	47	12	14	11	10	47	94
8	11	12	14	8	45	5	6	7	7	25	70
9	13	11	7	1	32	7	11	3	2	23	55
10	3	4	4	4	15	2	1	1	1	5	20
11	4	2	1	0	7	3	4	0	1	8	15
TOTALS	60%				1219	40%				826	2045
AVERAGE	12.7 period				50.8	8.6 period				34.4	85.2

Peak AM Hour is *** 8:00am to 9:00am ***
Volume Lane 1 : 125 Lane 2 : 68 Combined: 193
Directional Split : 65% 35%
Peak Hour Factor : 0.868 0.739 0.818
Peak / Day Total : 0.103 0.083 0.095

Peak PM Hour is *** 5:00pm to 6:00pm ***
Volume Lane 1 : 131 Lane 2 : 68 Combined: 199
Directional Split : 66% 34%
Peak Hour Factor : 0.885 0.773 0.888
Peak / Day Total : 0.108 0.083 0.098

NOTTING.TXT

01/24/06 Gresham, Smith and Partners Page: 1
11:23:14 101 South Fifth Street Suite 1400
Louisville, KY 40202
(502) 627-8900

*** Dual Channel 15 Minute ***

Site ID : NOTTINGHAM Date : Nov 3, 2005 Thu
Info 1 : NB Factor : 1.00
Info 2 : SB

Lane 1-Normal, Axle, /2 Lane 2-Normal, Axle, /2

Nov 3, 2005 Thu

Hour Starts	1-NB 0	15	30	45	Hour Total	2-SB 0	15	30	45	Hour Total	Combined Total
AM											
12	0	1	1	3	5	2	1	0	0	3	8
1	0	1	1	0	2	1	0	0	0	1	3
2	0	1	3	0	4	0	2	0	1	3	7
3	2	1	0	0	3	1	0	2	2	5	8
4	1	1	0	1	3	0	0	0	2	2	5
5	1	1	0	2	4	0	2	2	1	5	9
6	0	2	4	4	10	4	2	8	16	30	40
7	16	23	18	32	89	25	24	25	22	96	185
8	37	23	36	36	132	16	30	26	27	99	231
9	13	8	16	19	56	35	20	16	23	94	150
10	13	18	22	14	67	23	14	13	10	60	127
11	17	19	22	21	79	16	19	24	30	89	168
PM											
12	14	34	29	24	101	29	30	19	24	102	203
1	28	21	19	10	78	21	19	18	18	76	154
2	14	22	17	23	76	21	17	17	17	72	148
3	16	29	17	17	79	14	23	34	35	106	185
4	18	27	25	28	98	33	24	40	33	130	228
5	26	30	24	24	104	70	73	78	48	269	373
6	35	25	13	39	112	40	35	10	21	106	218
7	13	12	11	1	37	14	11	11	9	45	82
8	15	6	13	5	39	6	7	12	12	37	76
9	6	9	6	3	24	3	6	2	6	17	41
10	11	5	7	4	27	3	3	1	2	9	36
11	4	3	6	5	18	1	1	3	2	7	25
TOTALS	46%				1247	54%				1463	2710
AVERAGE	13.0 period				52.0	15.2 period				61.0	112.9

Peak AM Hour is *** 8:00am to 9:00am ***
Volume Lane 1 : 132 Lane 2 : 99 Combined: 231
Directional Split : 57% 43%
Peak Hour Factor : 0.892 0.825 0.917
Peak / Day Total : 0.106 0.068 0.085

Peak PM Hour is *** 5:00pm to 6:00pm ***
Volume Lane 1 : 104 Lane 2 : 269 Combined: 373
Directional Split : 28% 72%
Peak Hour Factor : 0.867 0.862 0.905
Peak / Day Total : 0.083 0.184 0.138

LINN.TXT

01/24/06 Gresham, Smith and Partners Page: 1
11:23:41 101 South Fifth Street Suite 1400
Louisville, KY 40202
(502) 627-8900

*** Dual Channel 15 Minute ***

Site ID : LINN STATION Date : Nov 3, 2005 Thu
Info 1 : WB Factor : 1.00
Info 2 : EB

Lane 1-Normal, Axle, /2 Lane 2-Normal, Axle, /2

Nov 3, 2005 Thu

Hour Starts	1-WB 0	15	30	45	Hour Total	2-EB 0	15	30	45	Hour Total	Combined Total
AM											
12	2	1	2	0	5	2	2	3	0	7	12
1	0	1	0	0	1	0	3	1	0	4	5
2	0	0	0	0	0	0	1	0	1	2	2
3	0	1	2	0	3	0	1	2	0	3	6
4	0	3	1	0	4	0	0	1	2	3	7
5	1	0	4	3	8	2	1	5	8	16	24
6	0	1	5	12	18	7	10	20	20	57	75
7	12	24	28	28	92	32	29	41	59	161	253
8	21	24	25	34	104	50	52	26	38	166	270
9	34	29	41	29	133	30	33	44	39	146	279
10	32	32	33	33	130	23	31	39	38	131	261
11	26	37	43	51	157	37	42	43	49	171	328
PM											
12	55	62	52	48	217	55	47	51	61	214	431
1	34	37	39	36	146	50	42	63	46	201	347
2	32	38	47	43	160	41	54	48	58	201	361
3	38	48	47	49	182	43	50	45	47	185	367
4	46	52	61	77	236	51	43	47	49	190	426
5	88	80	94	84	346	63	72	66	68	269	615
6	50	66	54	53	223	77	56	43	42	218	441
7	32	39	30	27	128	31	33	19	18	101	229
8	20	12	18	16	66	16	22	20	24	82	148
9	24	11	14	13	62	26	31	14	9	80	142
10	6	6	1	6	19	12	5	2	7	26	45
11	8	7	12	7	34	4	5	9	4	22	56
TOTALS	48%				2474	52%				2656	5130
AVERAGE	25.8 period				103.1	27.7 period				110.7	213.8

Peak AM Hour is *** 11:00am to 12:00pm ***
Volume Lane 1 : 157 Lane 2 : 171 Combined: 328
Directional Split : 48% 52%
Peak Hour Factor : 0.770 0.872 0.820
Peak / Day Total : 0.063 0.064 0.064

Peak PM Hour is *** 5:00pm to 6:00pm ***
Volume Lane 1 : 346 Lane 2 : 269 Combined: 615
Directional Split : 56% 44%
Peak Hour Factor : 0.920 0.934 0.961
Peak / Day Total : 0.140 0.101 0.120

COAND.TXT

01/24/06 Gresham, Smith and Partners Page: 1
11:26:17 101 South Fifth Street Suite 1400
Louisville, KY 40202
(502) 627-8900

*** Dual Channel 15 Minute ***

Site ID : CO ANDERSON Date : Nov 17, 2005 Thu
Info 1 : SB Factor : 1.00
Info 2 : NB

Lane 1-Normal, Axle, /2 Lane 2-Normal, Axle, /2

Nov 17, 2005 Thu

Hour Starts	1-SB 0	15	30	45	Hour Total	2-NB 0	15	30	45	Hour Total	Combined Total
AM											
12	1	3	1	1	6	2	2	1	0	5	11
1	1	0	0	0	1	2	0	0	0	2	3
2	0	0	2	0	2	0	0	1	1	2	4
3	0	0	0	0	0	0	0	0	0	0	0
4	0	0	1	1	2	0	1	3	1	5	7
5	2	1	0	2	5	0	1	2	3	6	11
6	2	2	1	7	12	1	0	3	7	11	23
7	16	6	8	24	54	12	17	31	30	90	144
8	18	22	11	12	63	24	18	16	26	84	147
9	12	9	9	17	47	15	10	14	14	53	100
10	7	12	11	13	43	22	13	10	15	60	103
11	8	13	19	18	58	17	21	16	14	68	126
PM											
12	20	18	18	15	71	14	17	30	15	76	147
1	17	17	25	14	73	30	16	12	18	76	149
2	20	15	17	26	78	16	15	16	14	61	139
3	31	28	17	25	101	22	23	13	12	70	171
4	30	24	15	28	97	11	18	26	26	81	178
5	35	34	35	26	130	35	27	37	42	141	271
6	33	18	21	18	90	23	29	14	17	83	173
7	6	20	19	12	57	8	10	10	11	39	96
8	17	12	13	16	58	10	8	8	14	40	98
9	13	20	12	5	50	3	7	6	4	20	70
10	4	11	4	3	22	5	4	0	4	13	35
11	4	4	1	5	14	0	0	1	1	2	16
TOTALS	51%				1134	49%				1088	2222
AVERAGE	11.8 period				47.3	11.3 period				45.3	92.6

Peak AM Hour is *** 7:30am to 8:30am ***
Volume Lane 1 : 72 Lane 2 : 103 Combined: 175
Directional Split : 41% 59%
Peak Hour Factor : 0.750 0.831 0.810
Peak / Day Total : 0.063 0.095 0.079

Peak PM Hour is *** 5:00pm to 6:00pm ***
Volume Lane 1 : 130 Lane 2 : 141 Combined: 271
Directional Split : 48% 52%
Peak Hour Factor : 0.929 0.839 0.941
Peak / Day Total : 0.115 0.130 0.122

APPENDIX C

Vehicle Turning Movement Count Summaries

Turning Movement Summary

Shelbyville Rd. & Oxmoor Ln. / Norwood Dr.
AM Peak Hour

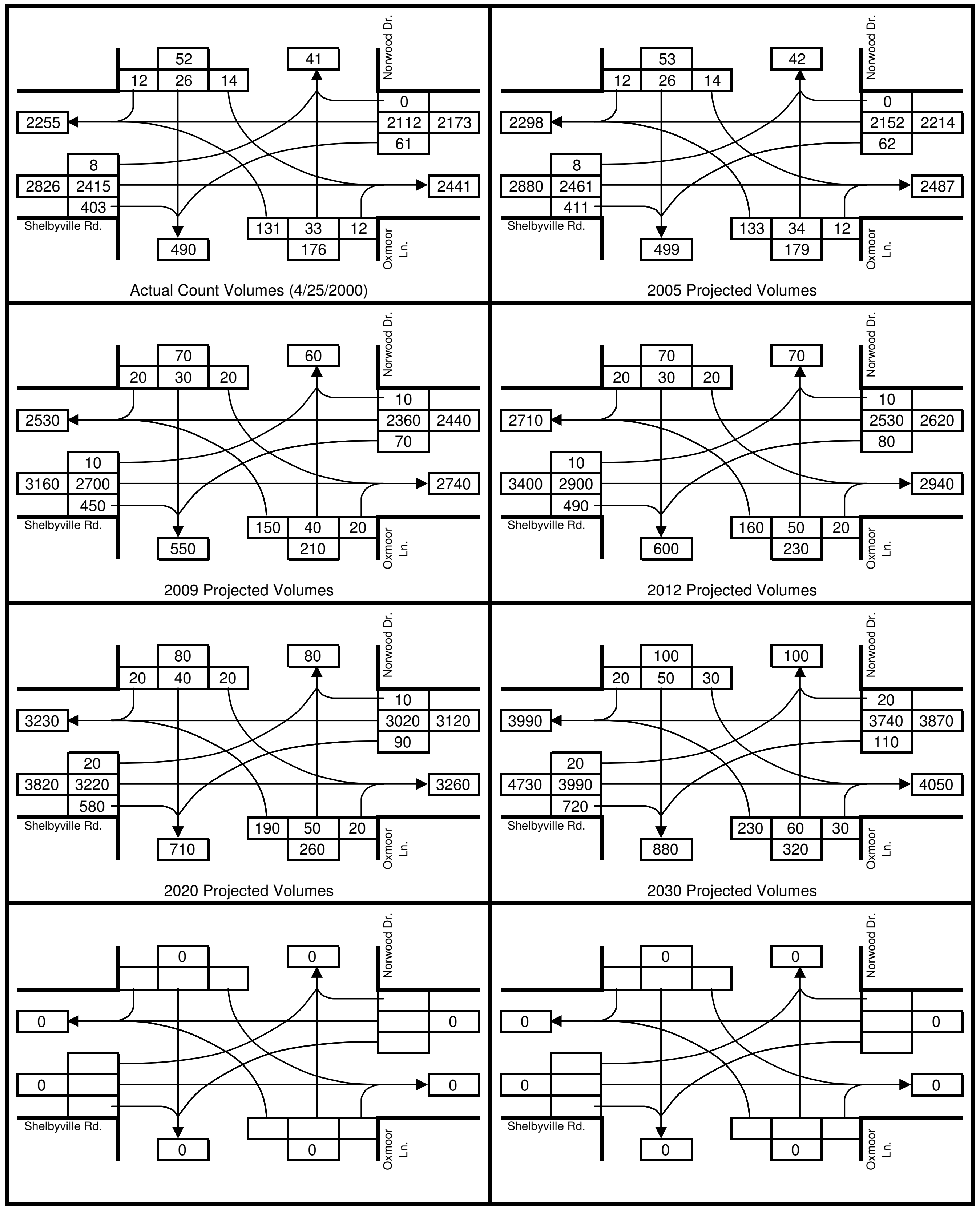

Shelbyville Rd. & Oxmoor Ln. / Norwood Dr.
PM Peak Hour

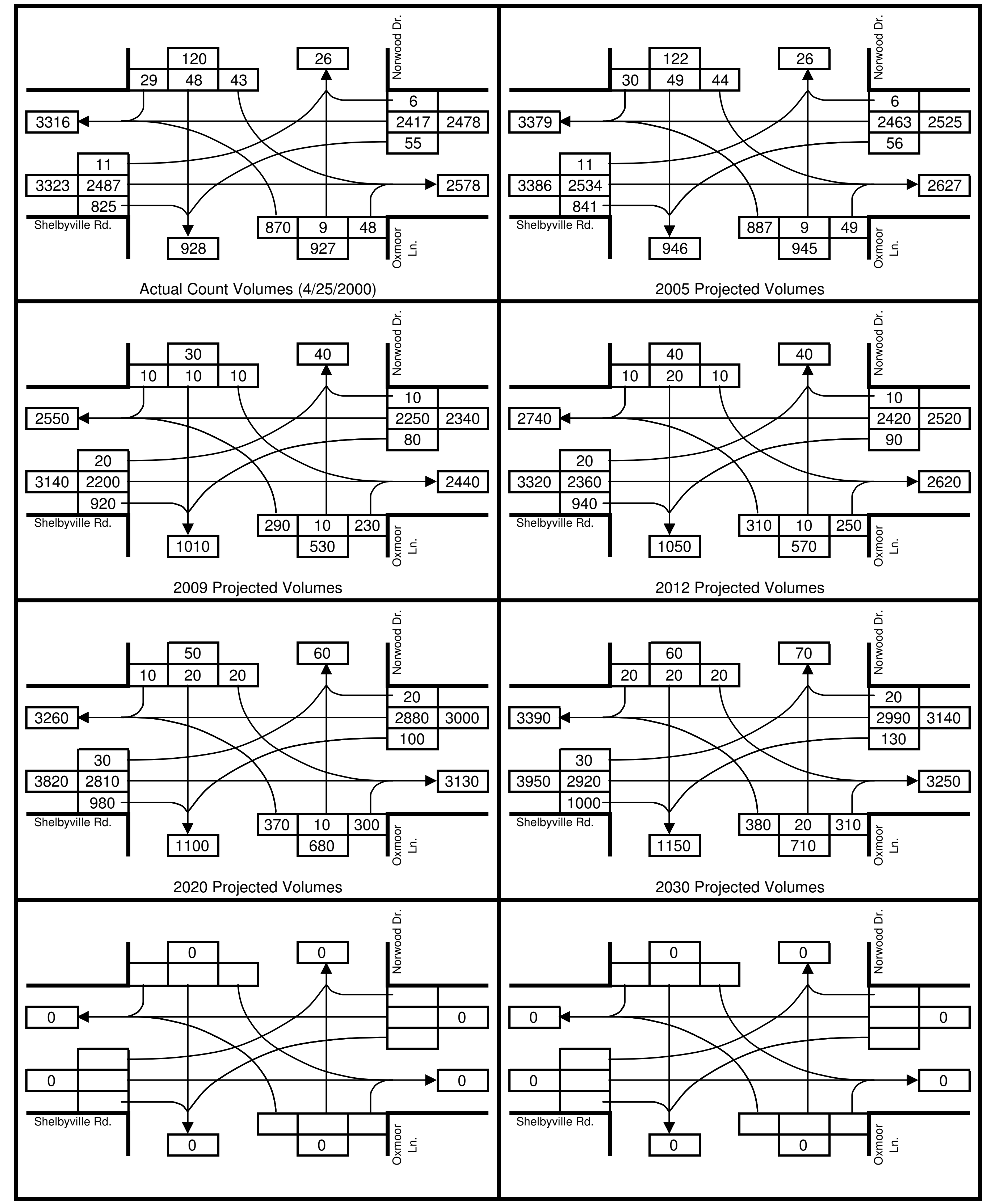

Turning Movement Summary

Shelbyville Rd. & St. Margaret Mary - West Drive
AM Peak Hour

N

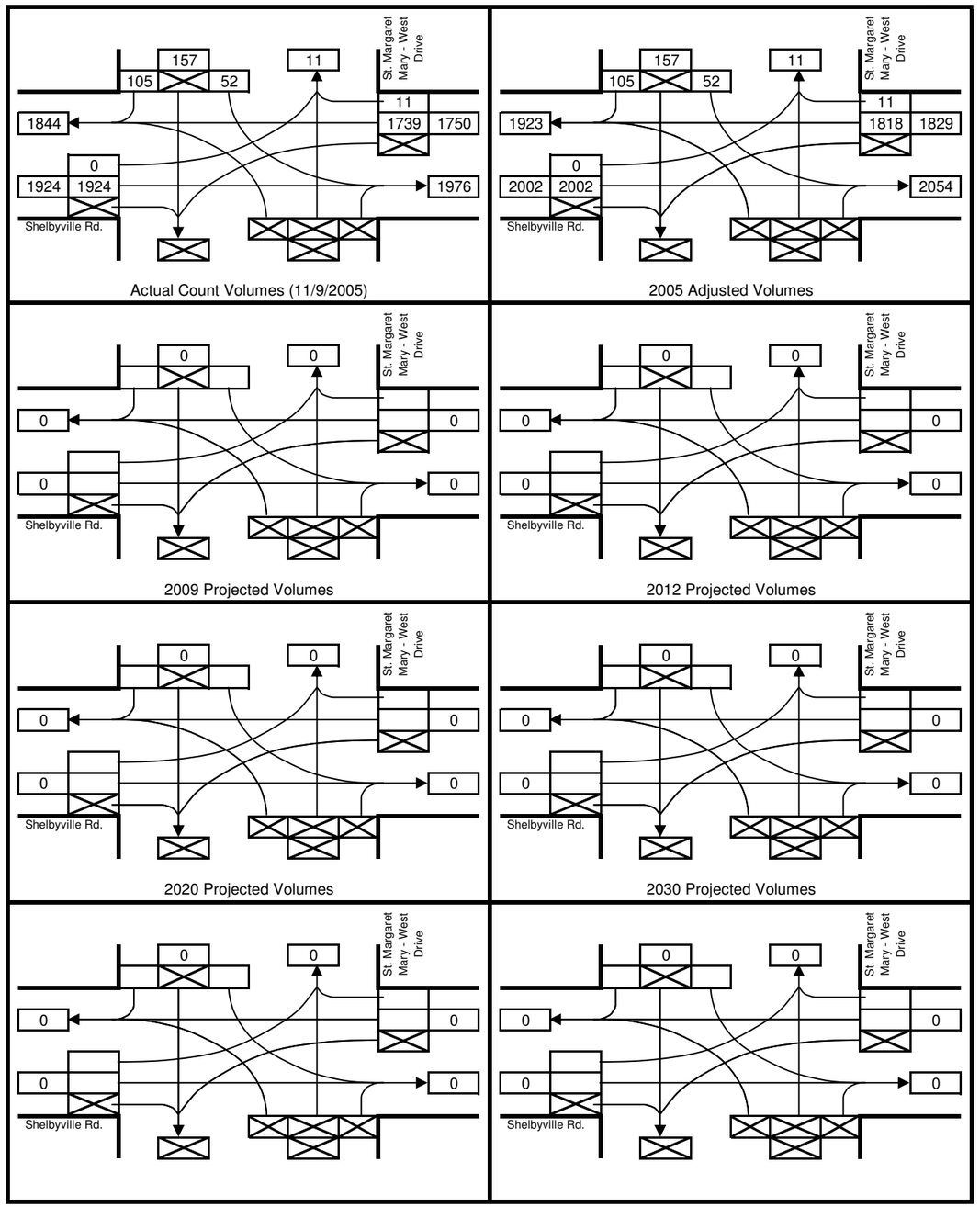

Shelbyville Rd. & St. Margaret Mary - West Drive
PM Peak Hour

N

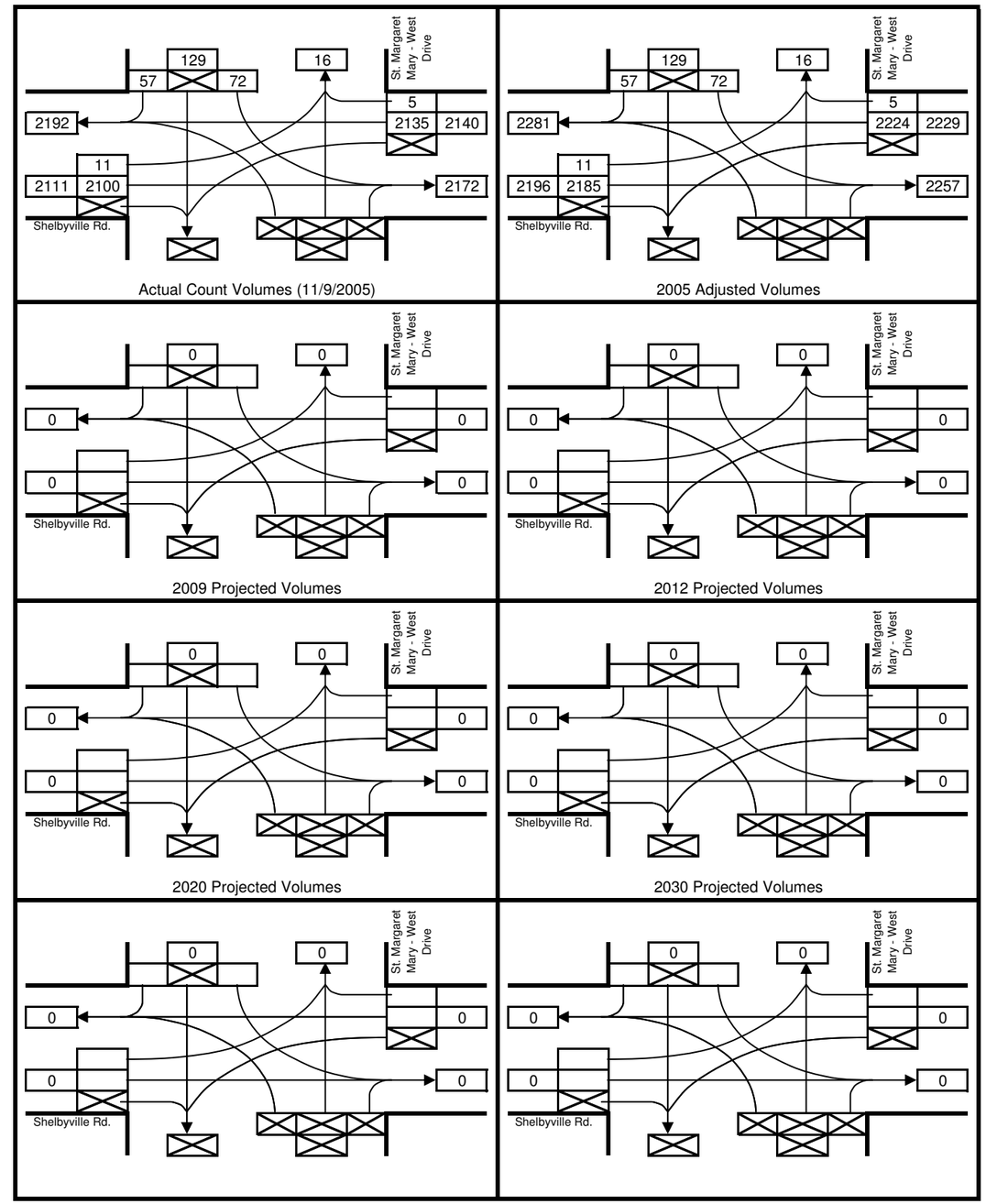

Turning Movement Summary

Shelbyville Rd. & St. Margaret Mary - East Drive
AM Peak Hour

N

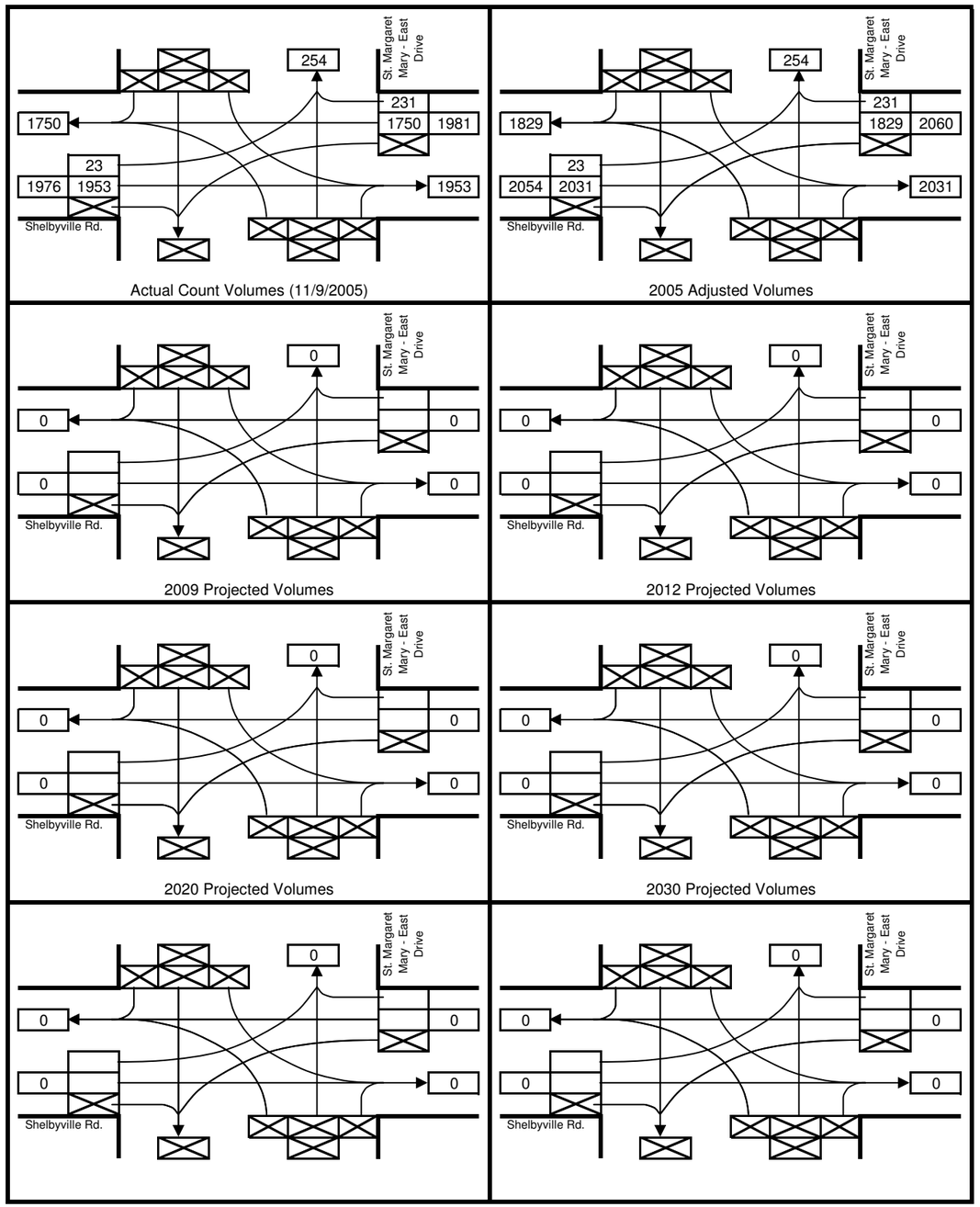

Shelbyville Rd. & St. Margaret Mary - East Drive
PM Peak Hour

N

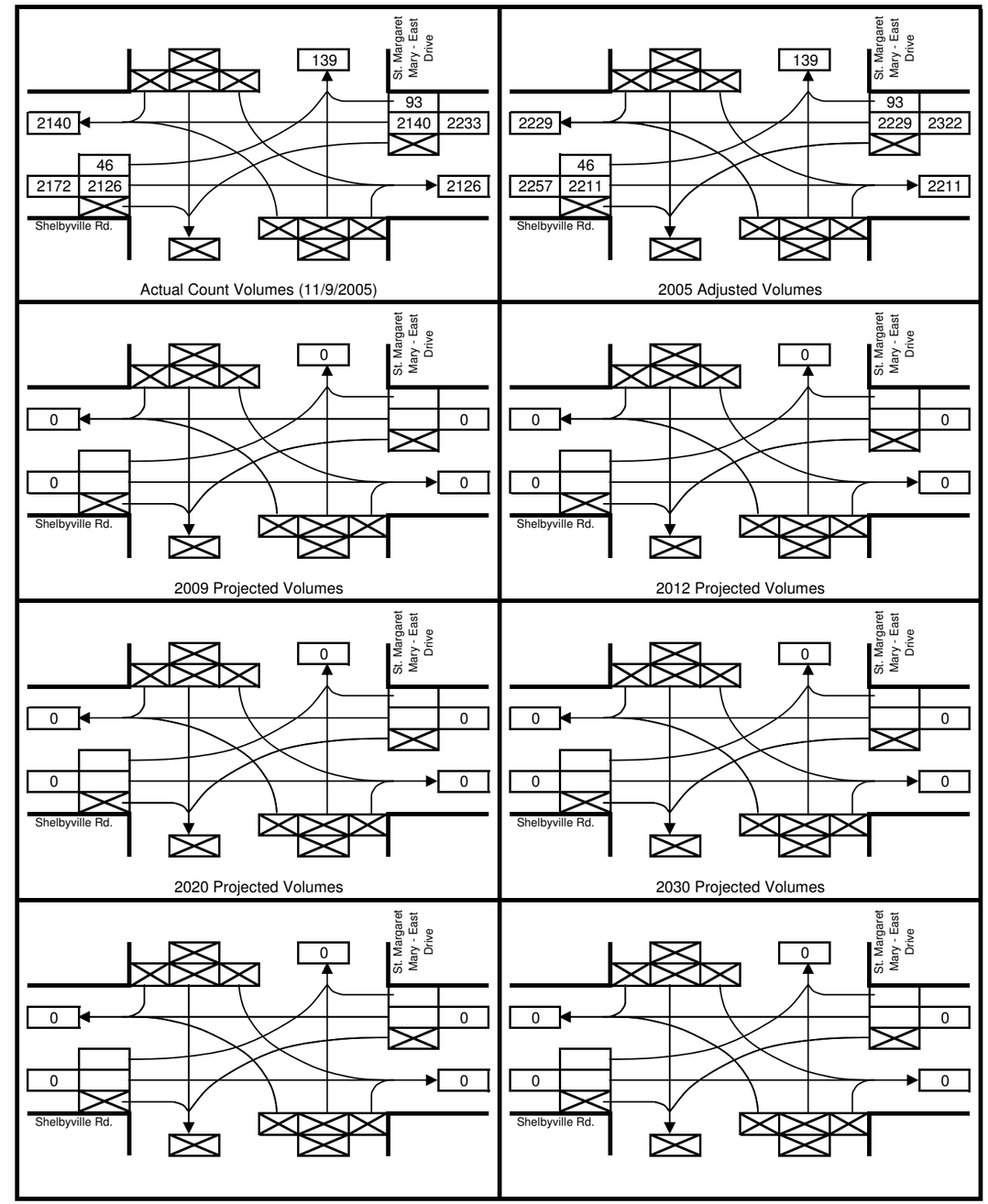

Turning Movement Summary

Shelbyville Rd. & Christian Way
AM Peak Hour

N

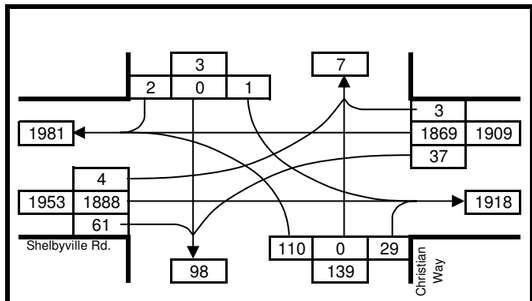

Actual Count Volumes (11/8/2005)

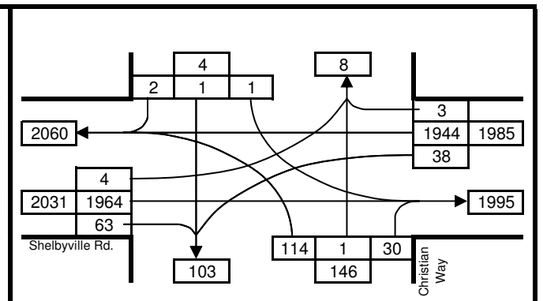

2005 Adjusted Volumes

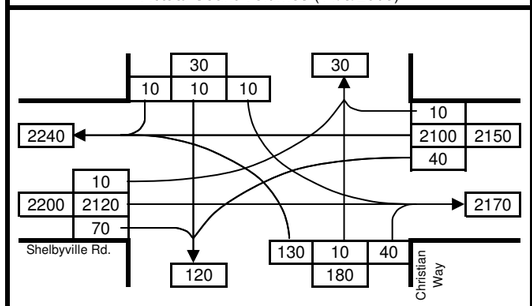

2009 Projected Volumes

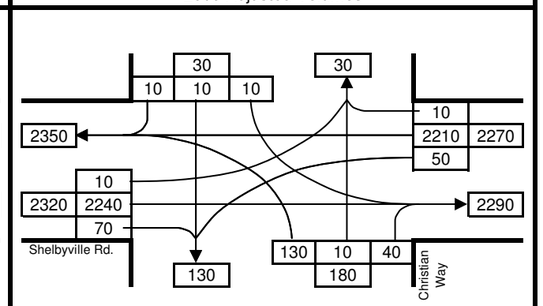

2012 Projected Volumes

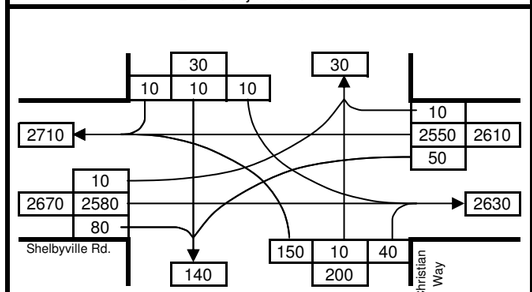

2020 Projected Volumes

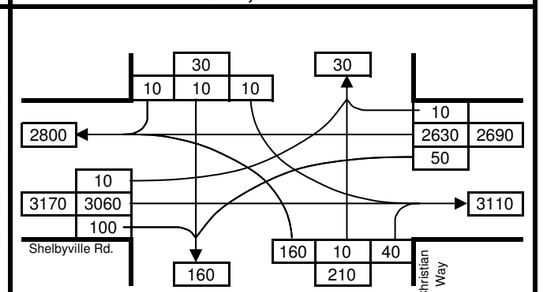

2030 Projected Volumes

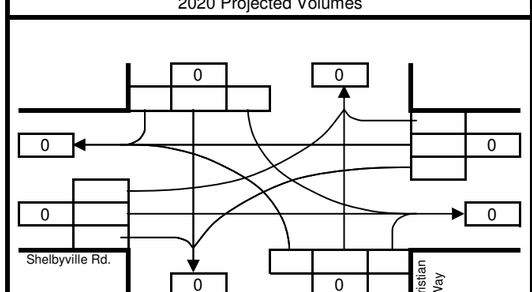

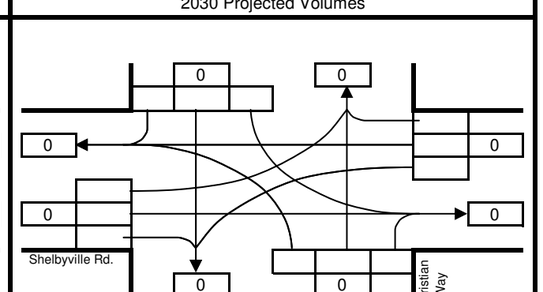

Shelbyville Rd. & Christian Way
PM Peak Hour

N

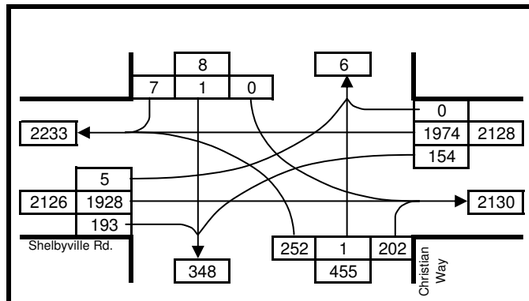

Actual Count Volumes (11/8/2005)

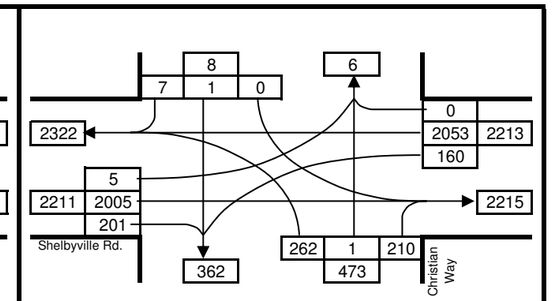

2005 Adjusted Volumes

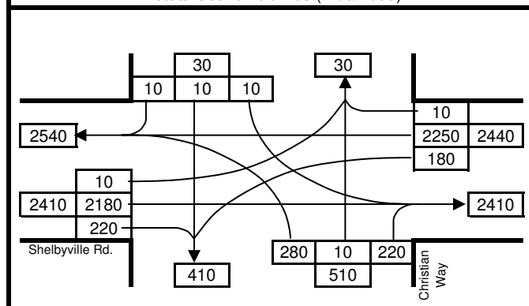

2009 Projected Volumes

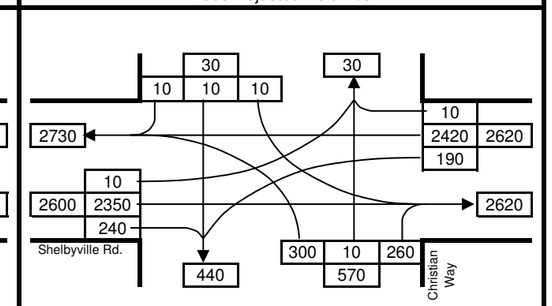

2012 Projected Volumes

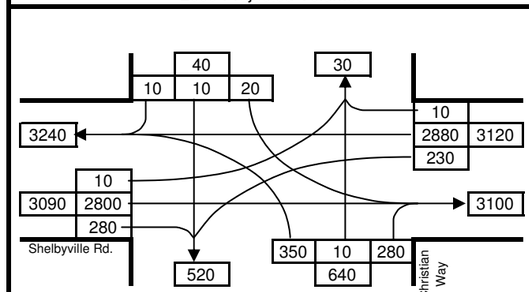

2020 Projected Volumes

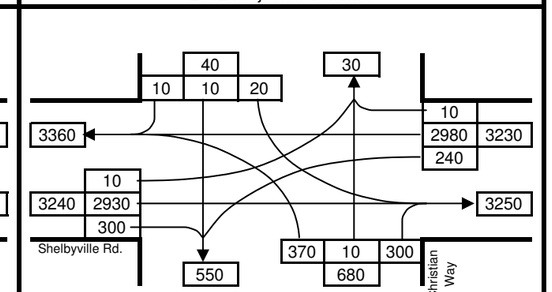

2030 Projected Volumes

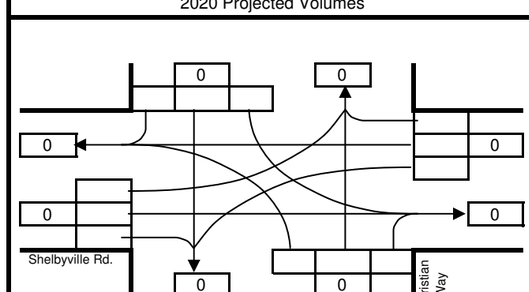

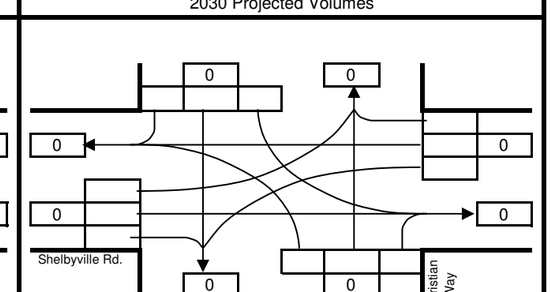

Turning Movement Summary

Shelbyville Rd. & 8 Mile Center
AM Peak Hour

N

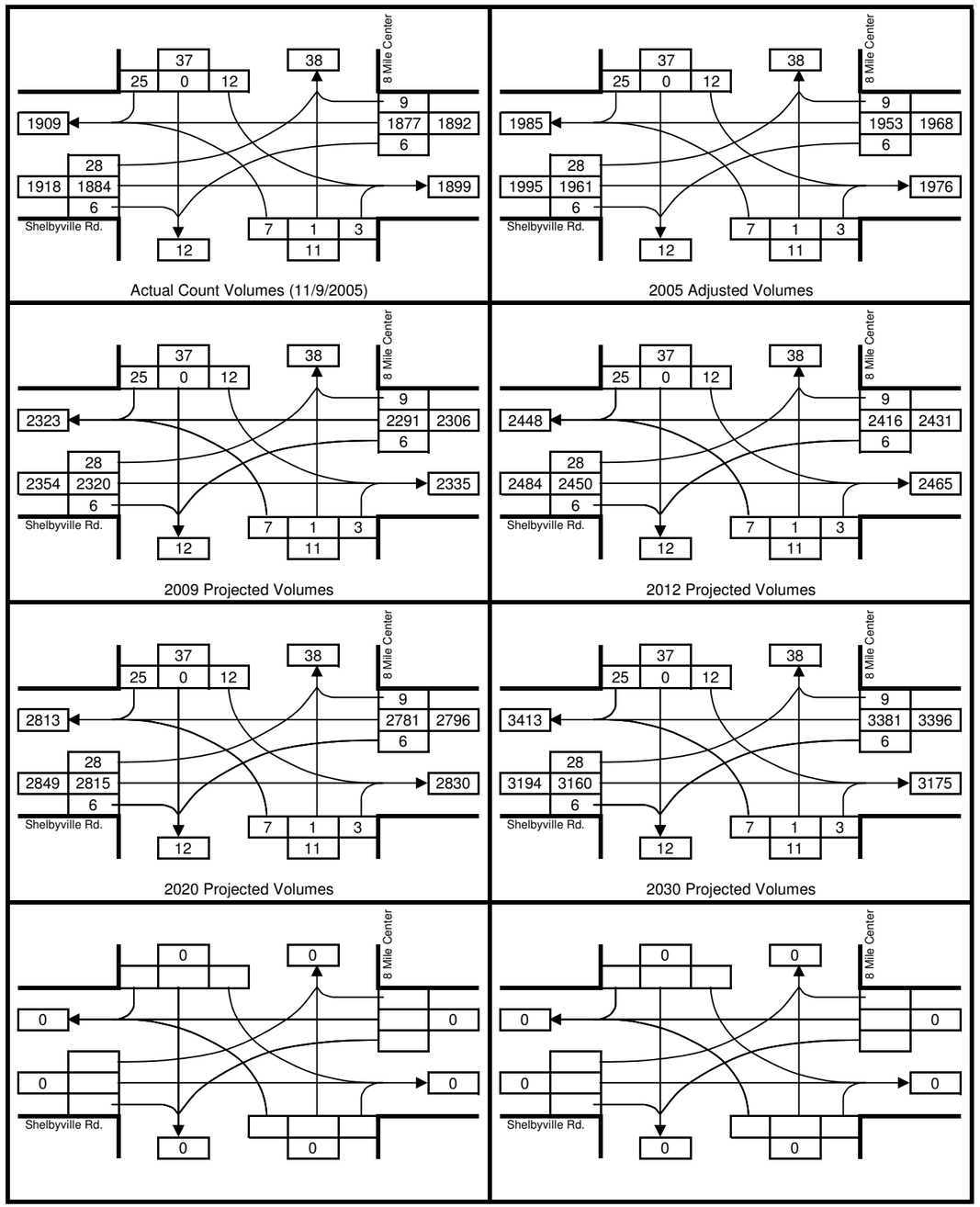

Shelbyville Rd. & 8 Mile Center
PM Peak Hour

N

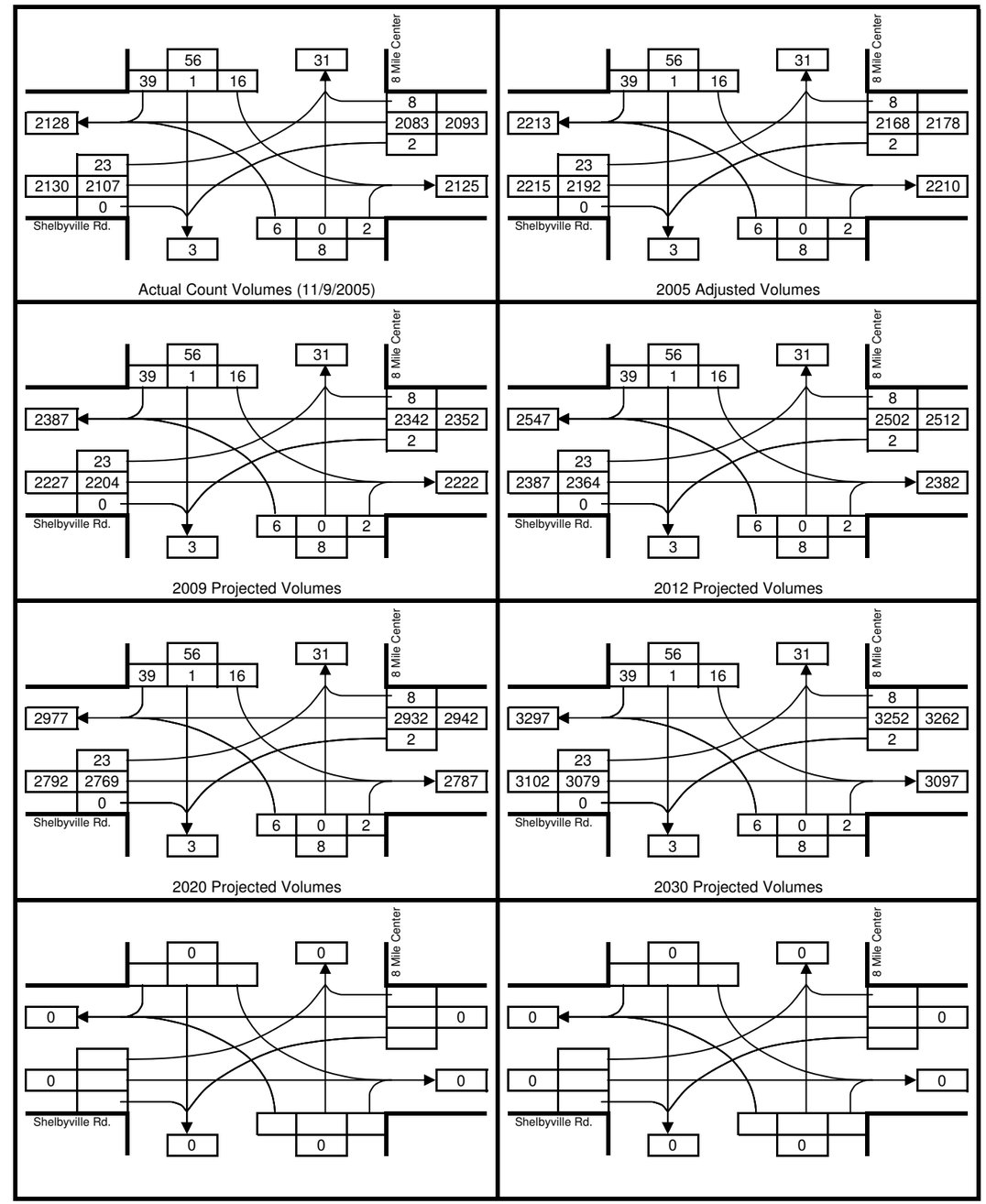

Turning Movement Summary

Shelbyville Rd. & Whipps Mill Rd.
AM Peak Hour

N

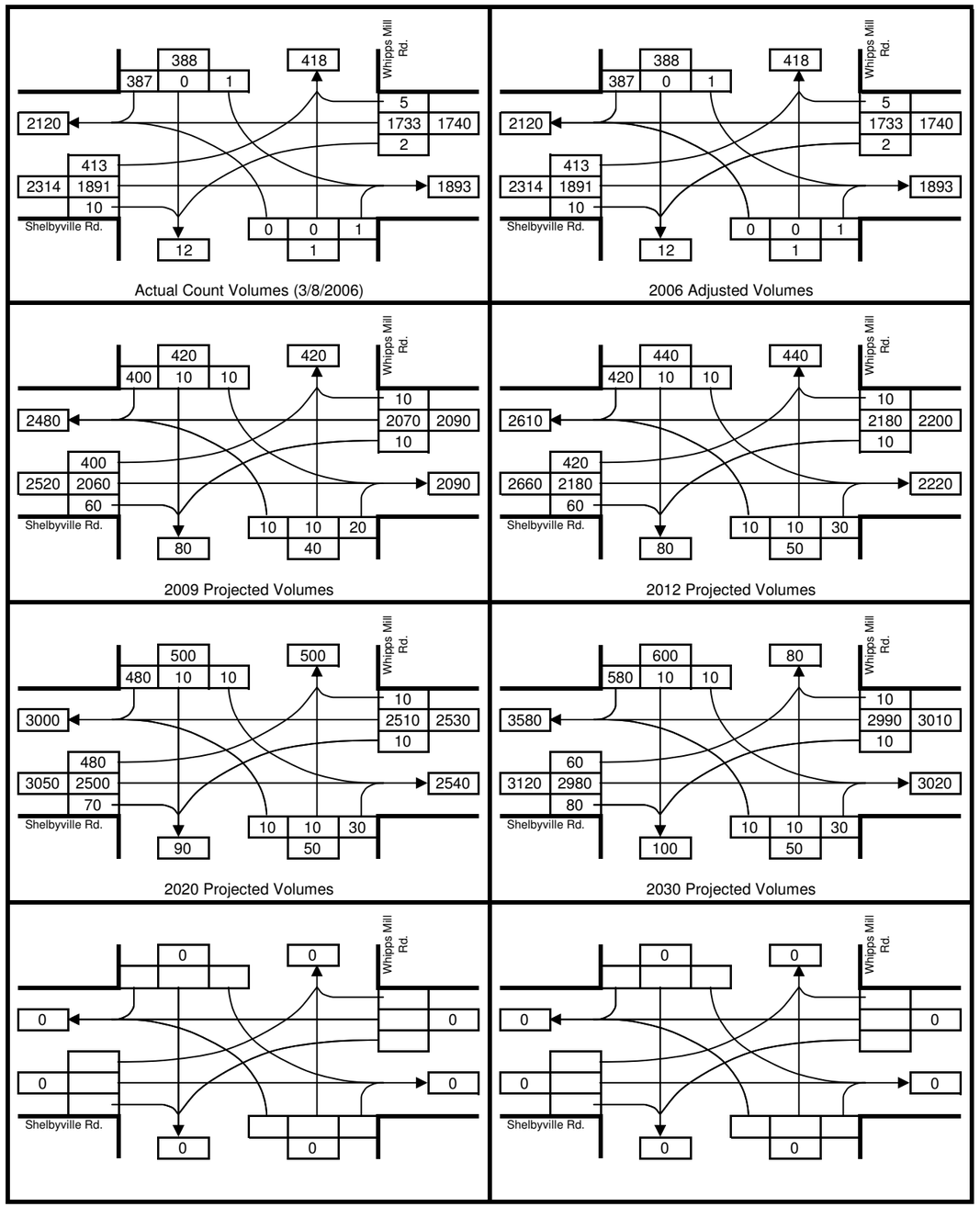

Shelbyville Rd. & Whipps Mill Rd.
PM Peak Hour

N

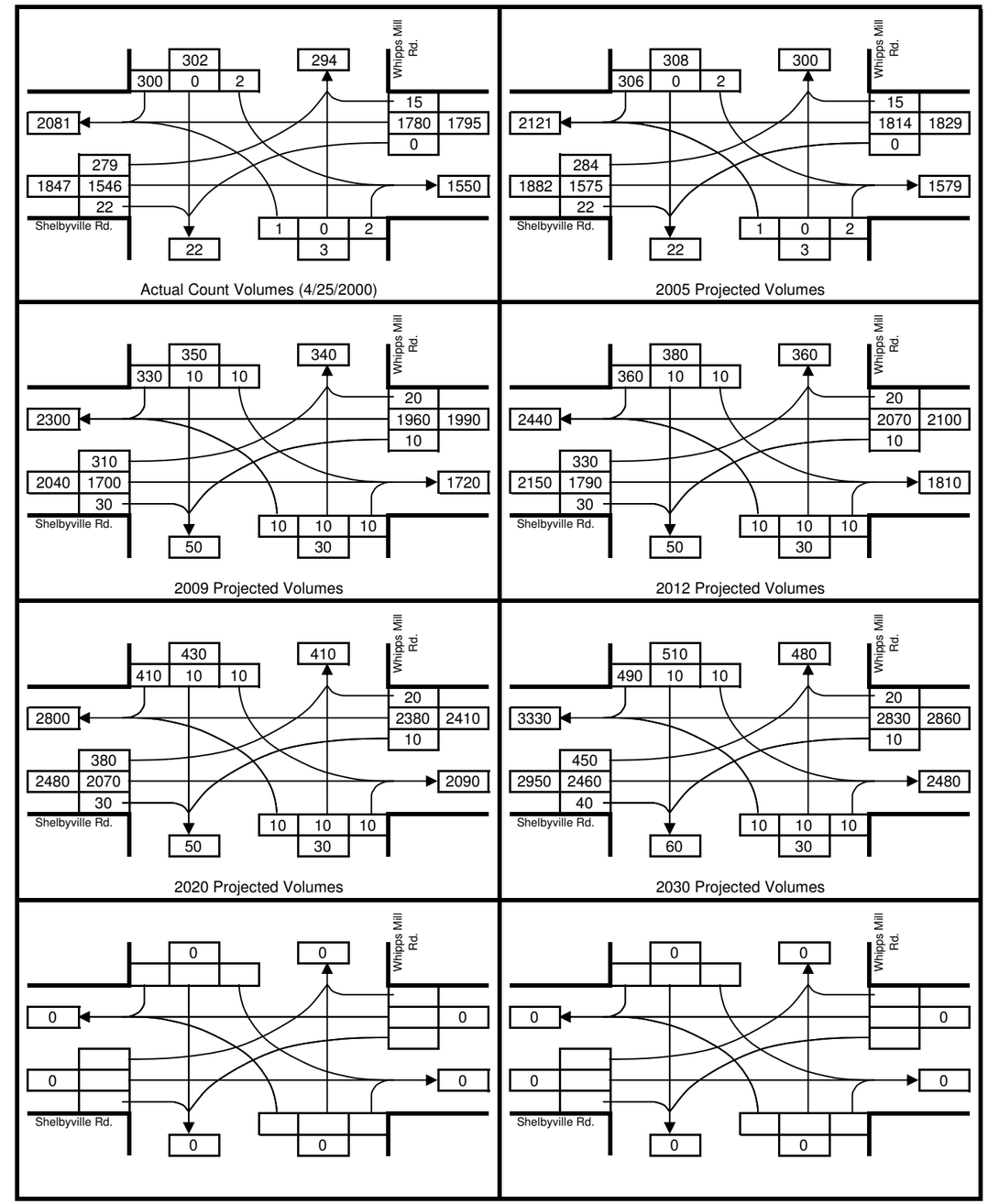

Turning Movement Summary

Shelbyville Rd. & Lyndon Ln.
AM Peak Hour

N

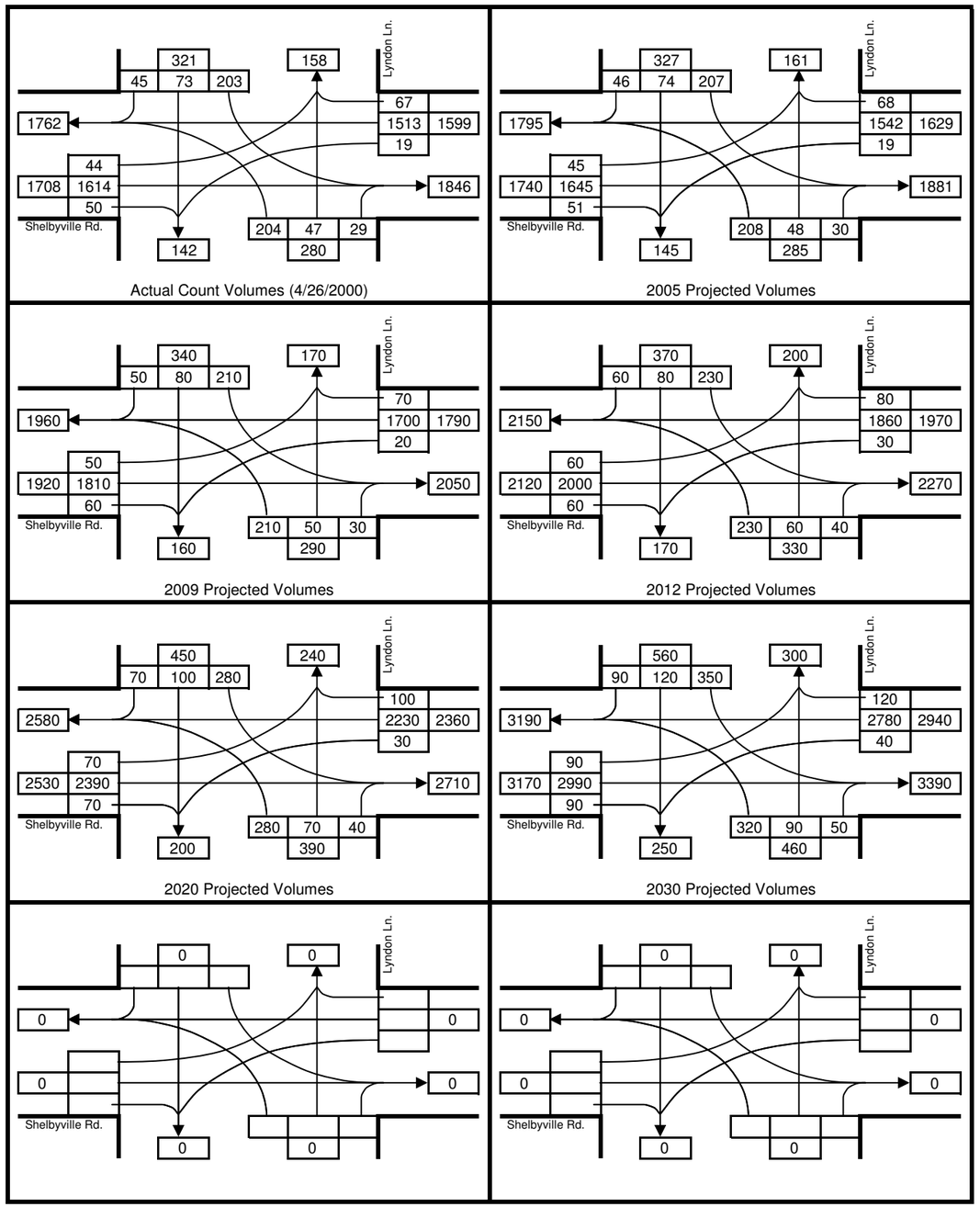

Shelbyville Rd. & Lyndon Ln.
PM Peak Hour

N

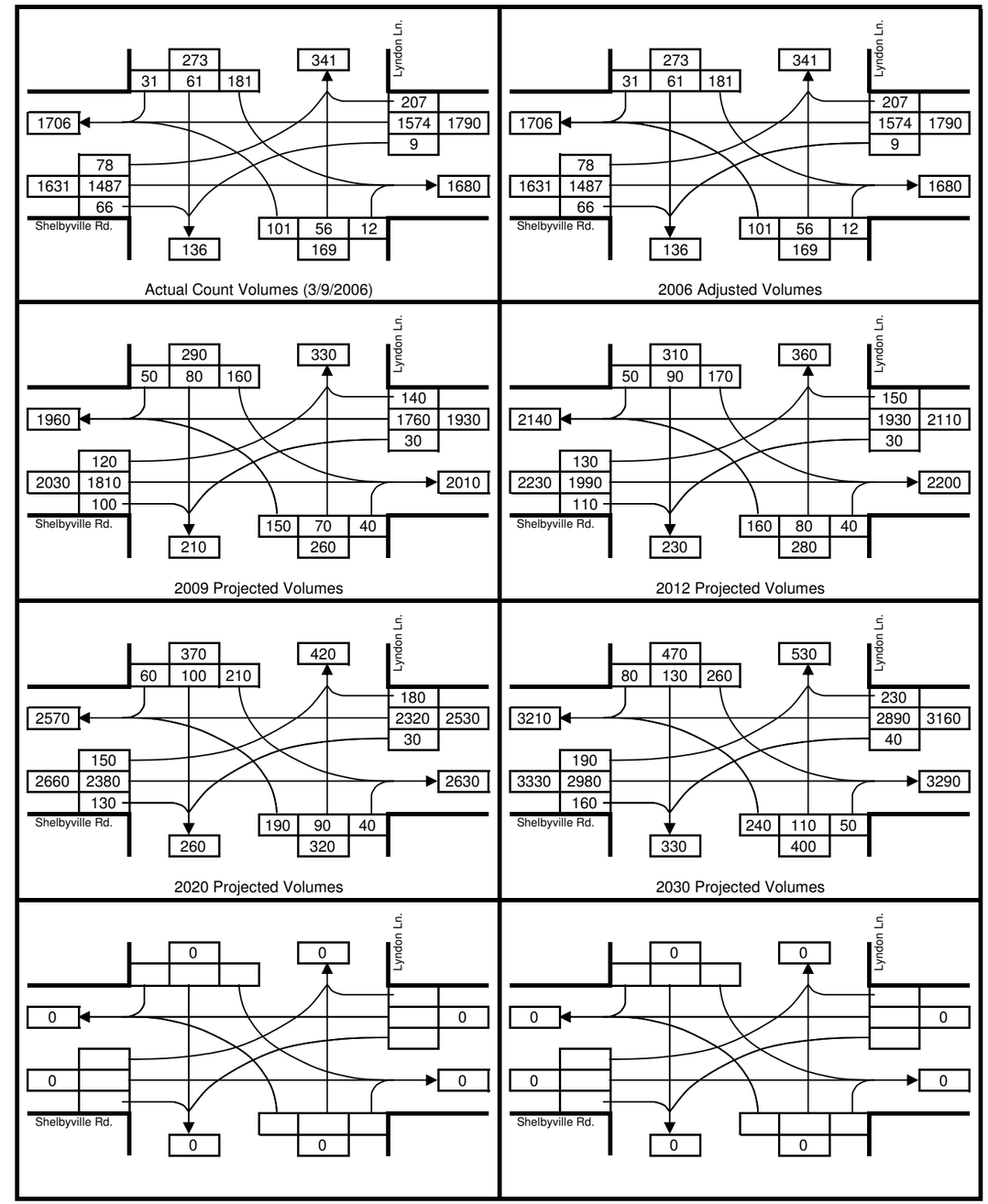

Turning Movement Summary

Shelbyville Rd. & Bellmeade Rd.
AM Peak Hour

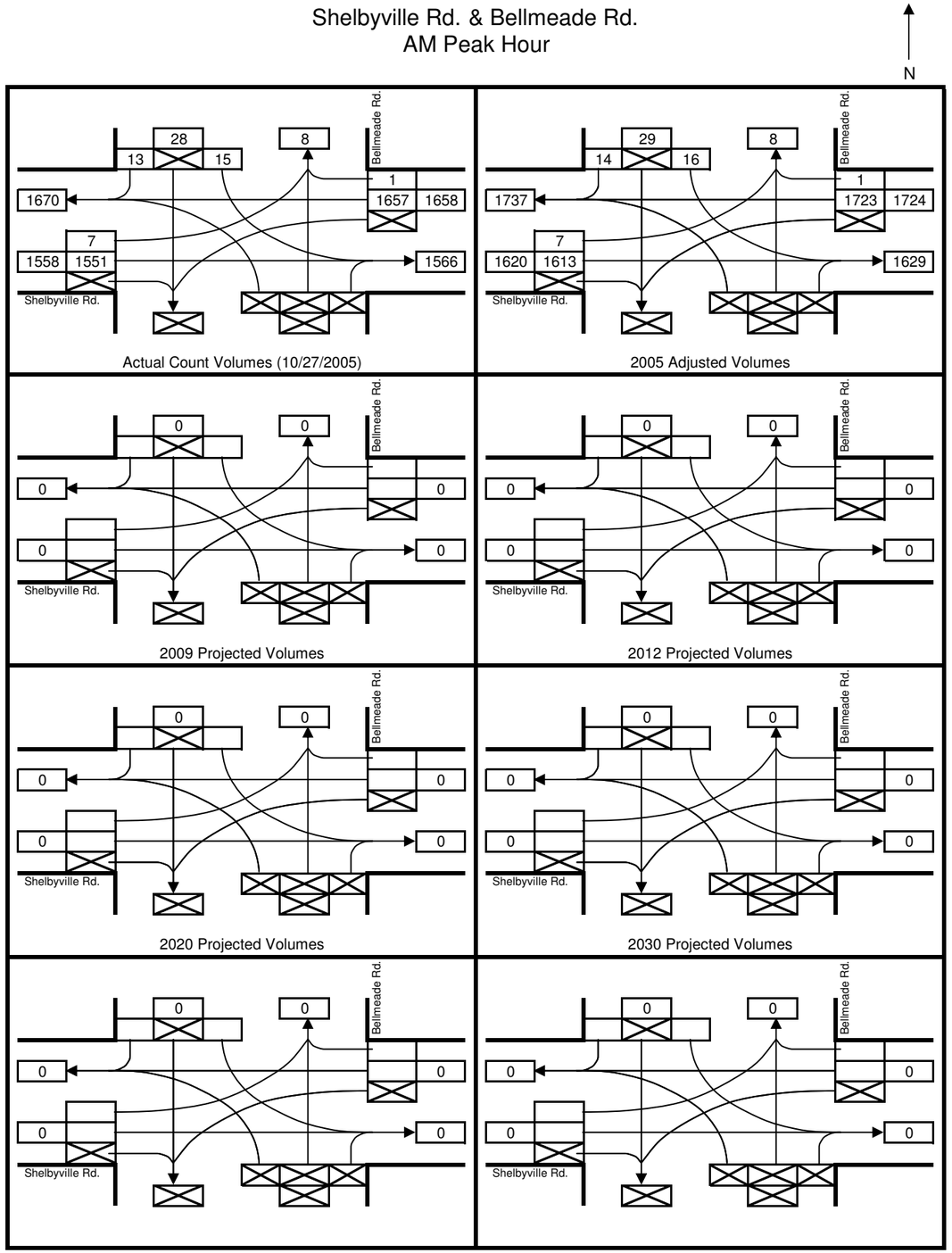

Shelbyville Rd. & Bellmeade Rd.
PM Peak Hour

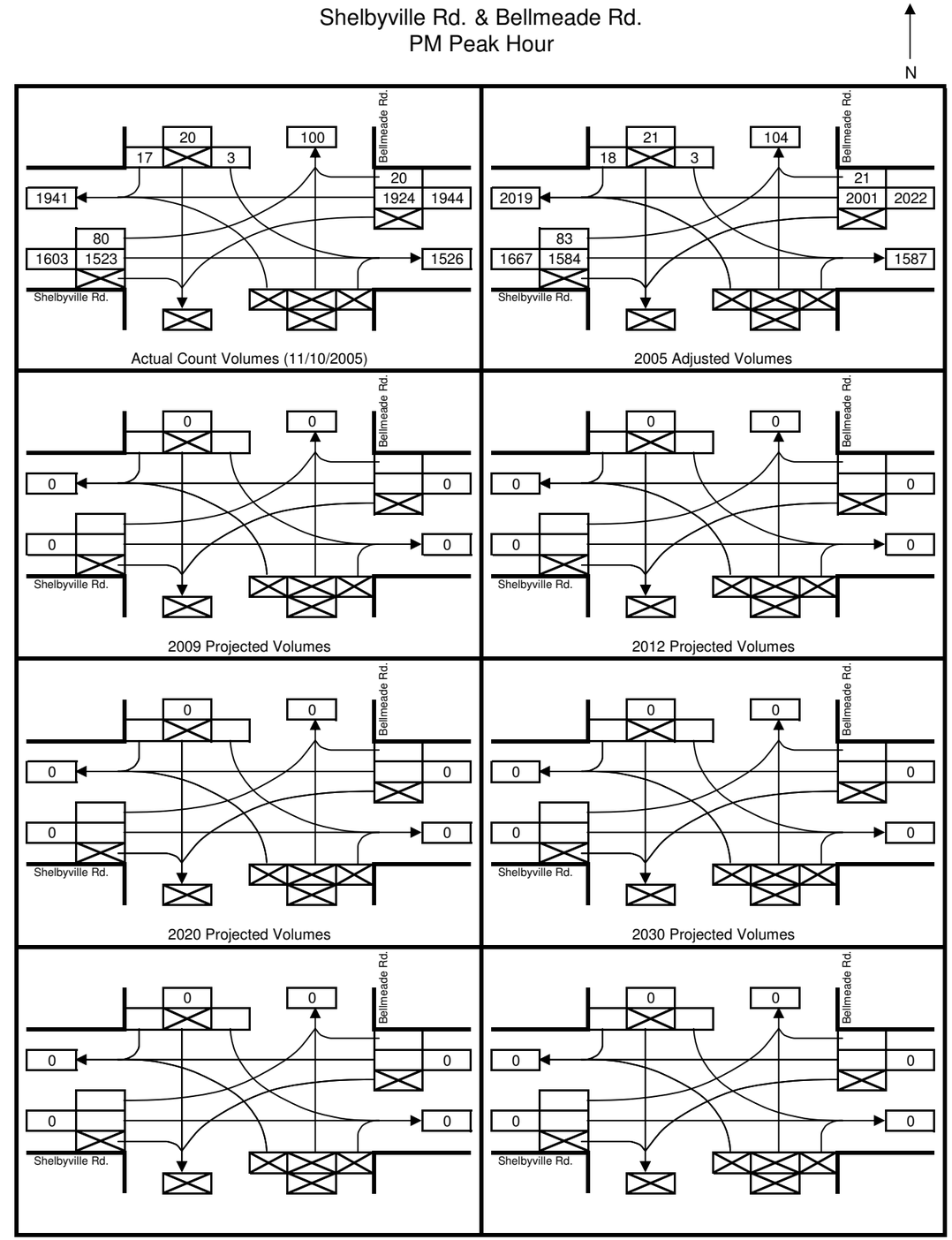

Turning Movement Summary

Shelbyville Rd. & Chadwick Rd.
AM Peak Hour

N

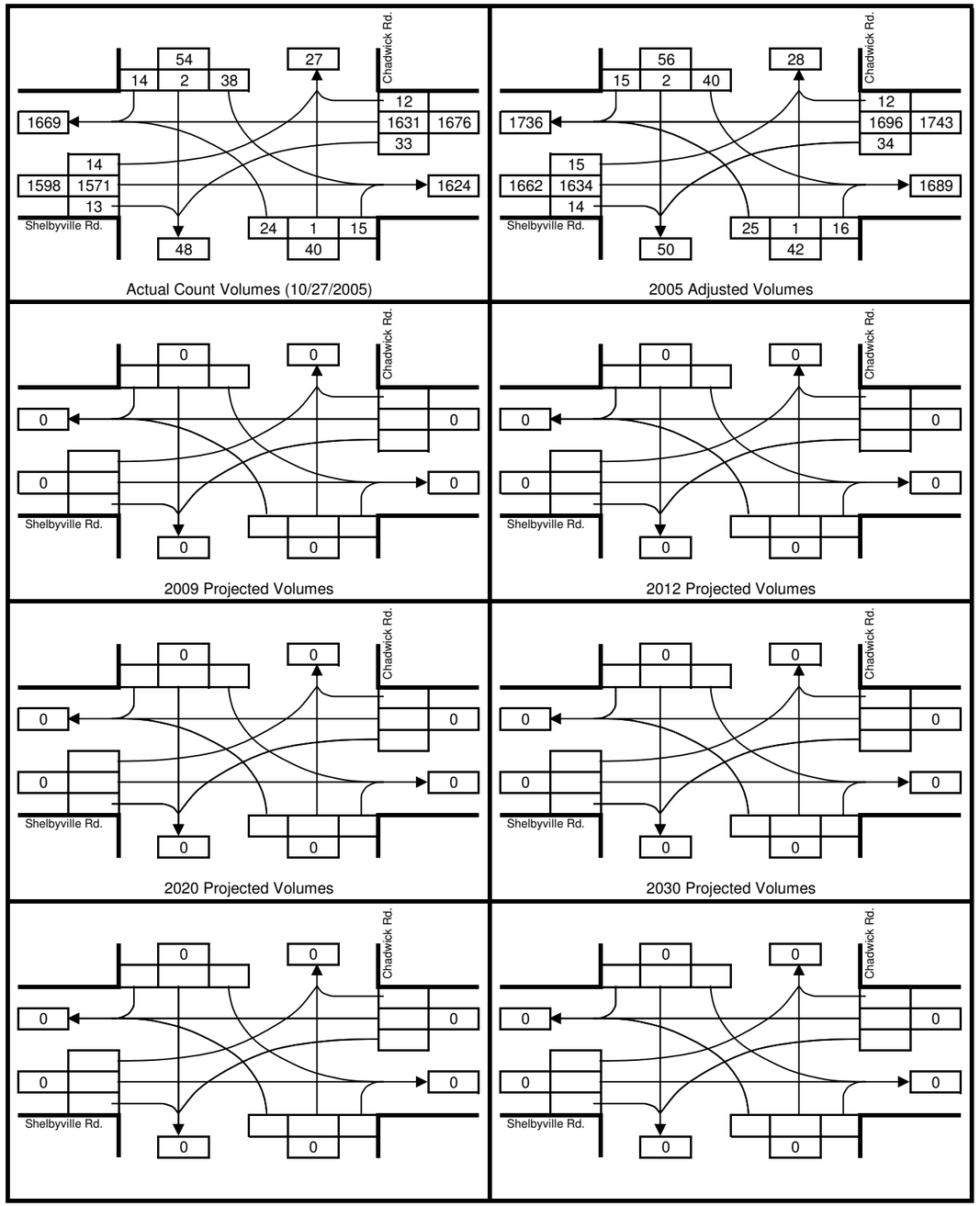

Shelbyville Rd. & Chadwick Rd.
PM Peak Hour

N

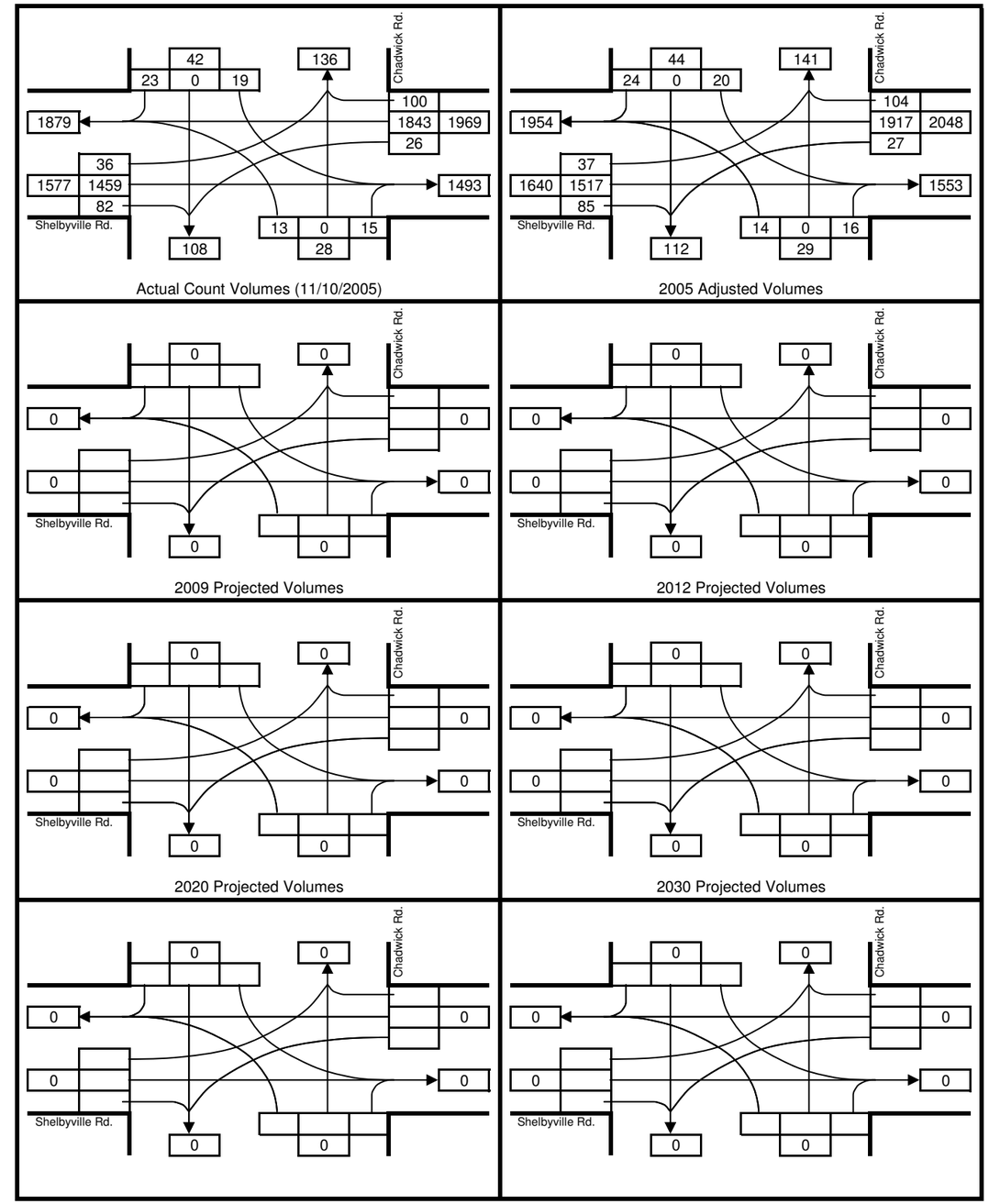

Turning Movement Summary

Shelbyville Rd. & Whittington Pkwy.
AM Peak Hour

N

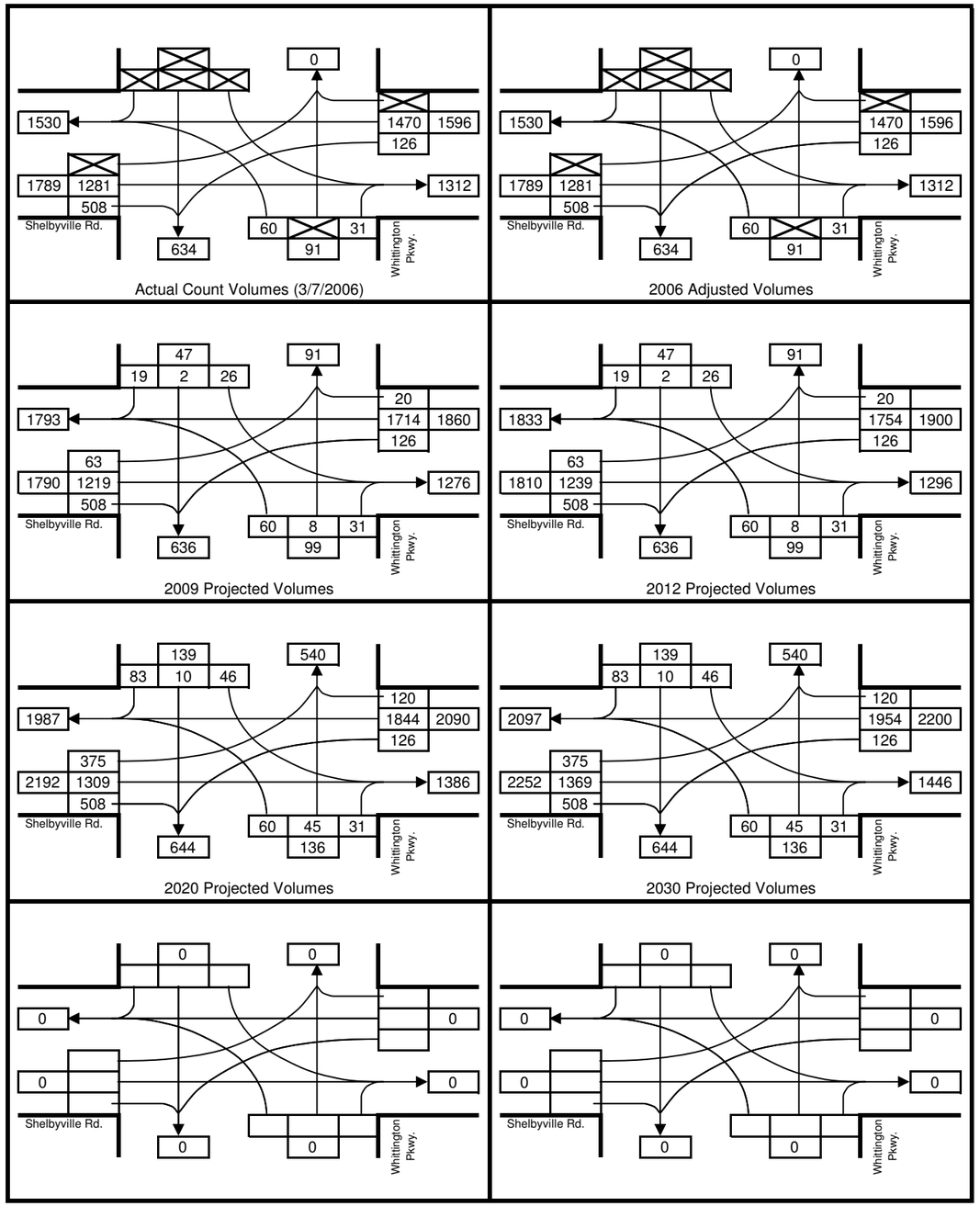

Shelbyville Rd. & Whittington Pkwy.
PM Peak Hour

N

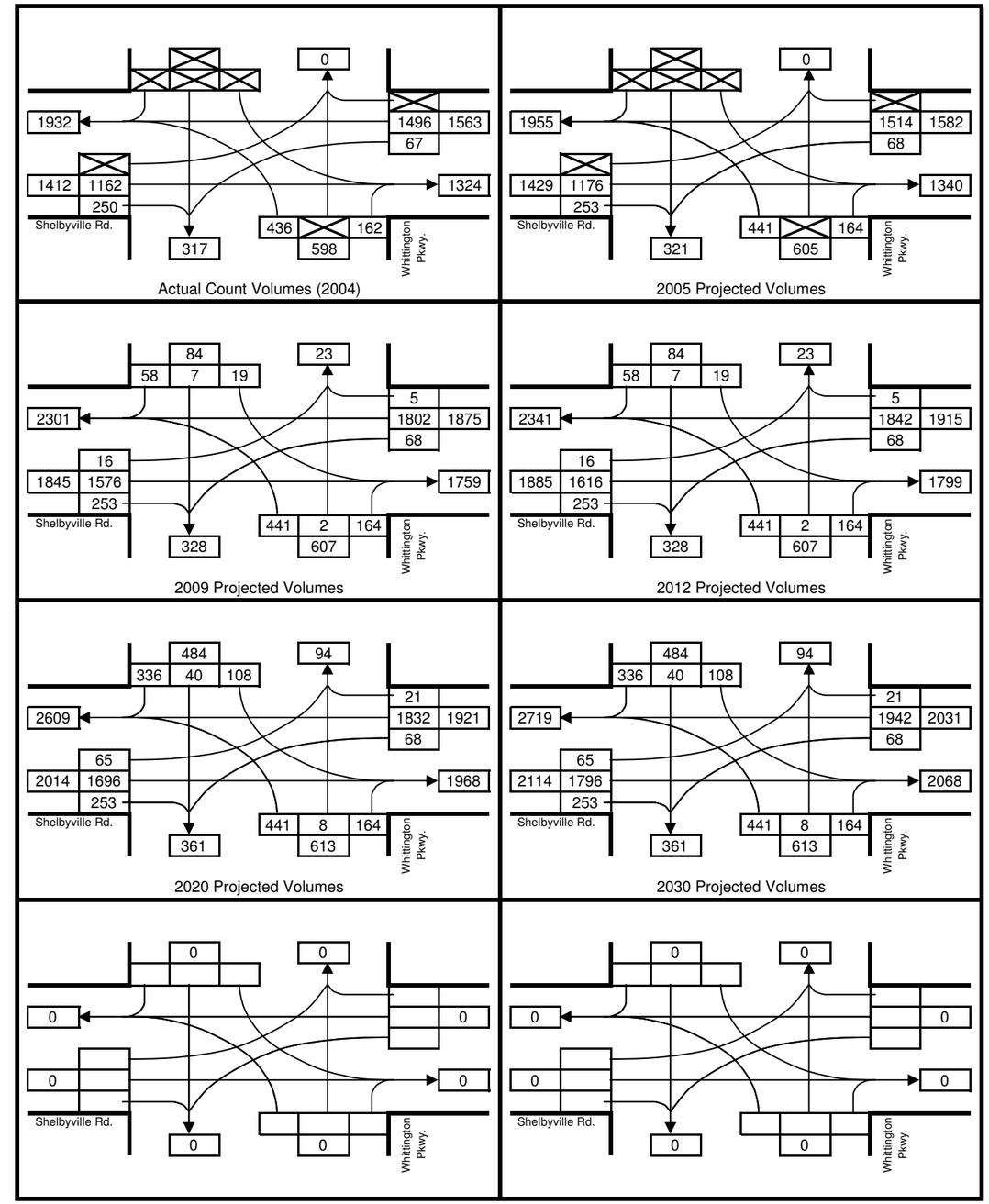

Turning Movement Summary

Shelbyville Rd. & Hurstbourne Pkwy.
AM Peak Hour
From Oxmoor Farm Study

N

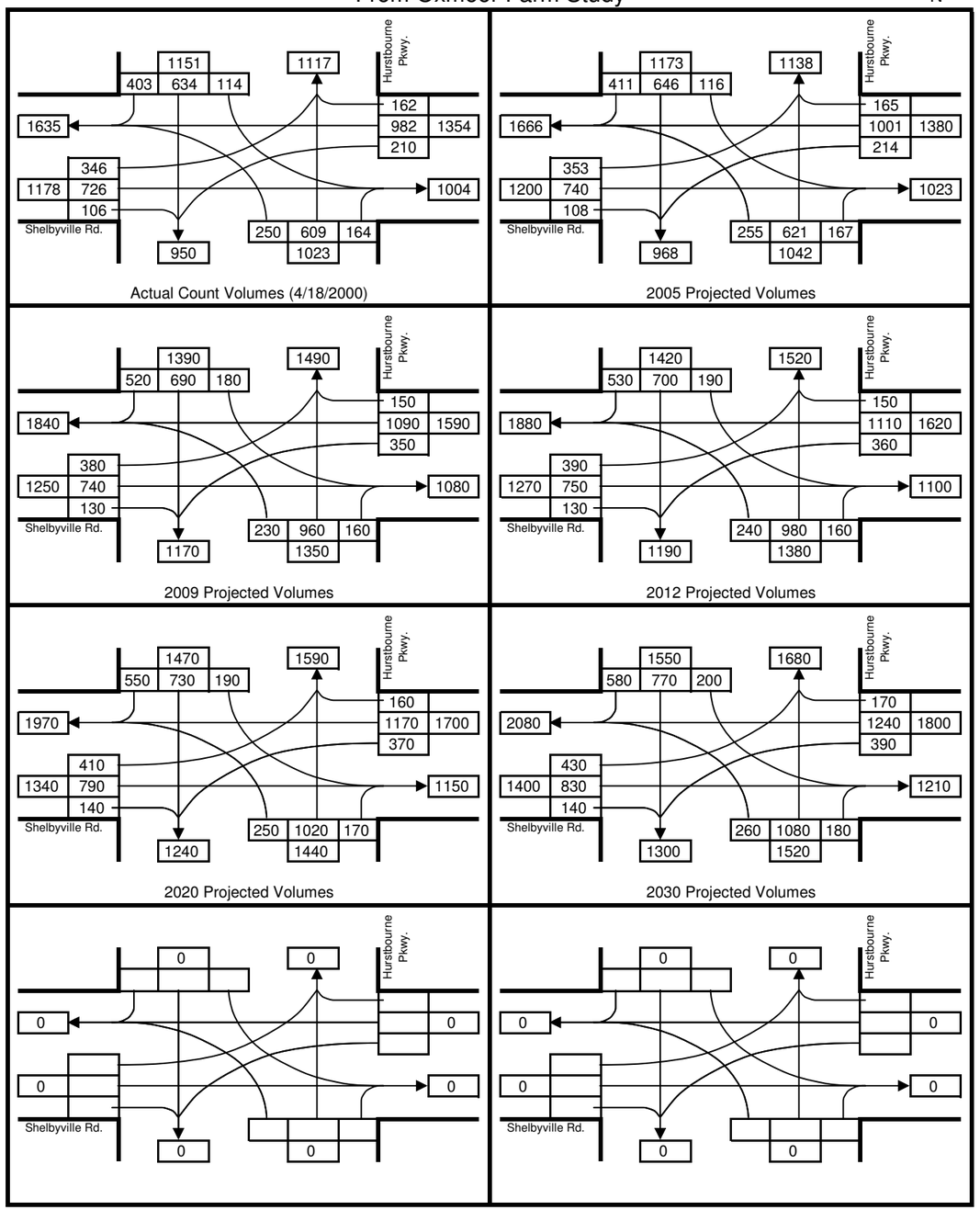

Shelbyville Rd. & Hurstbourne Pkwy.
PM Peak Hour
From Oxmoor Farm Study

N

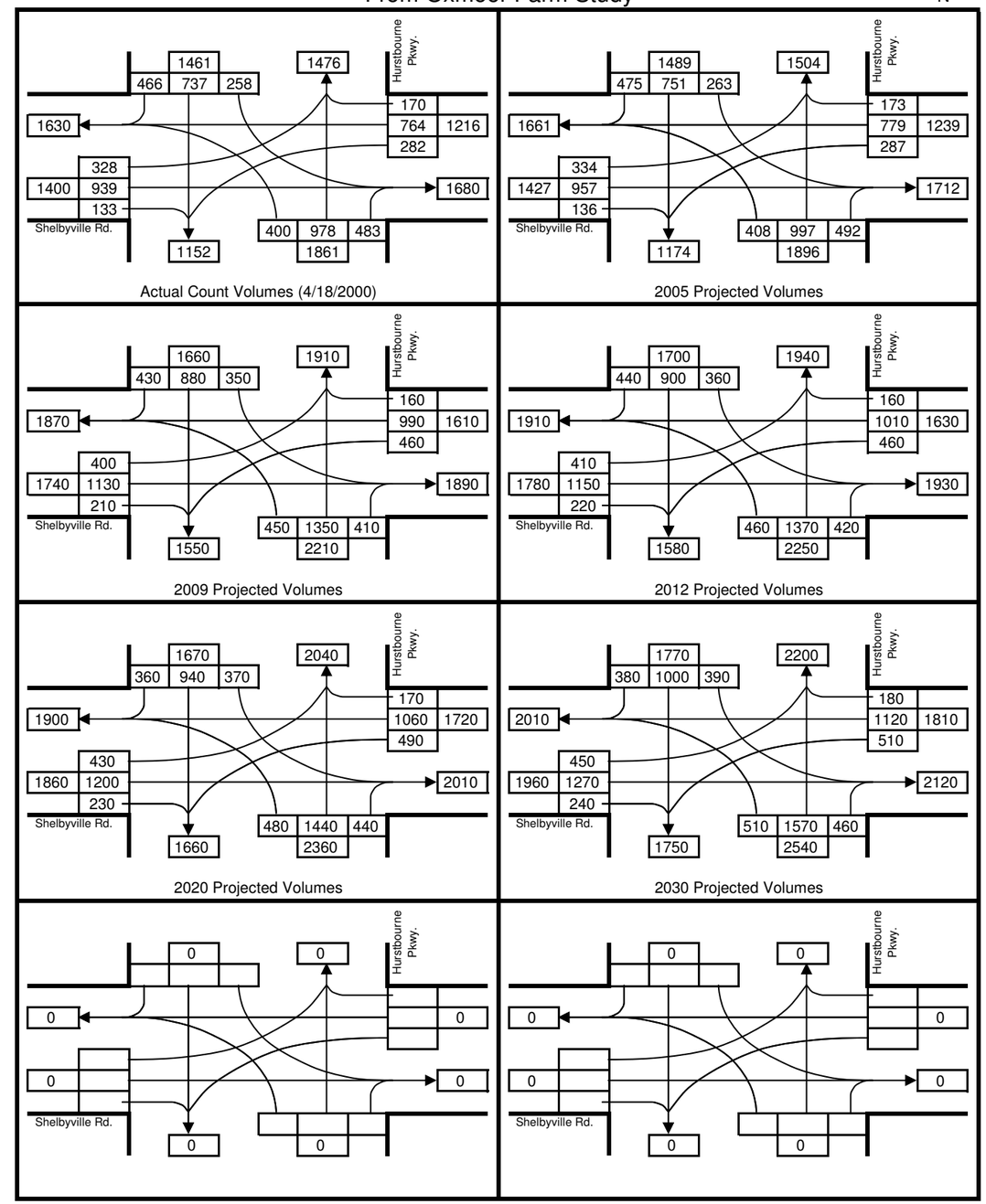

Turning Movement Summary

Shelbyville Rd. & Hurstbourne Pkwy.
AM Peak Hour
From KYTC for Hurstbourne Widening Project

N

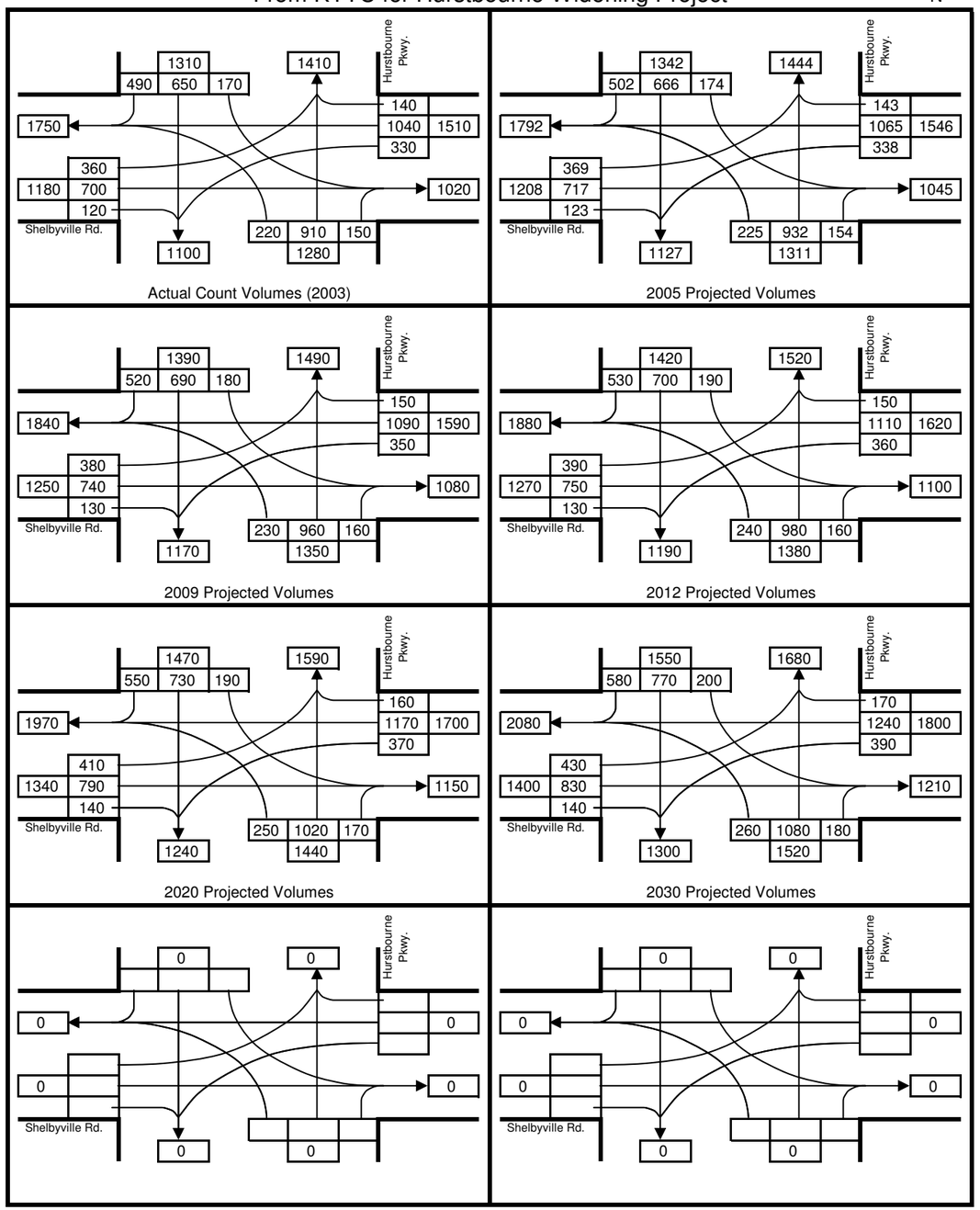

Shelbyville Rd. & Hurstbourne Pkwy.
PM Peak Hour
From KYTC for Hurstbourne Widening Project

N

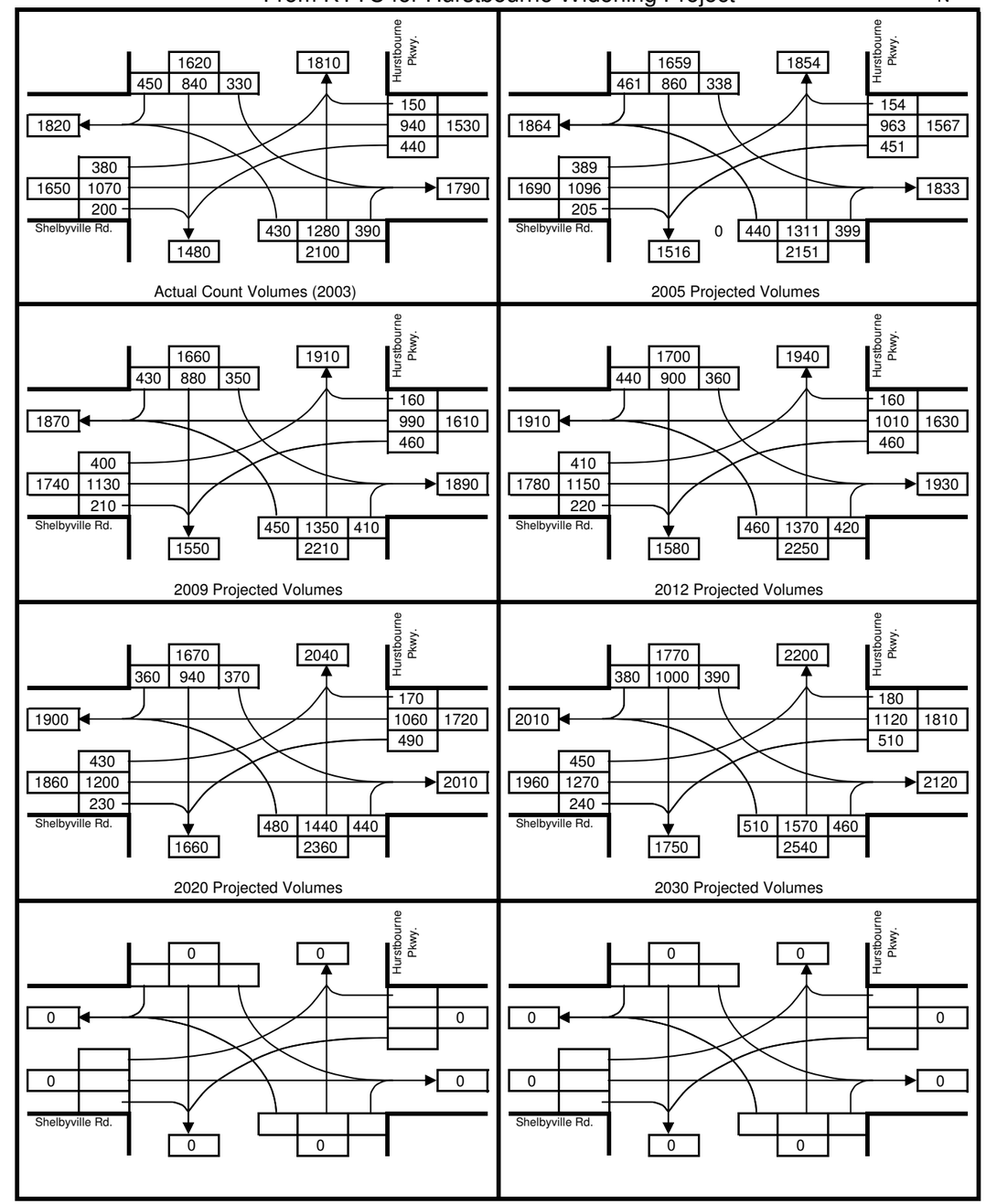

Turning Movement Summary

Shelbyville Rd. & Blue Ridge Manor
AM Peak Hour

N

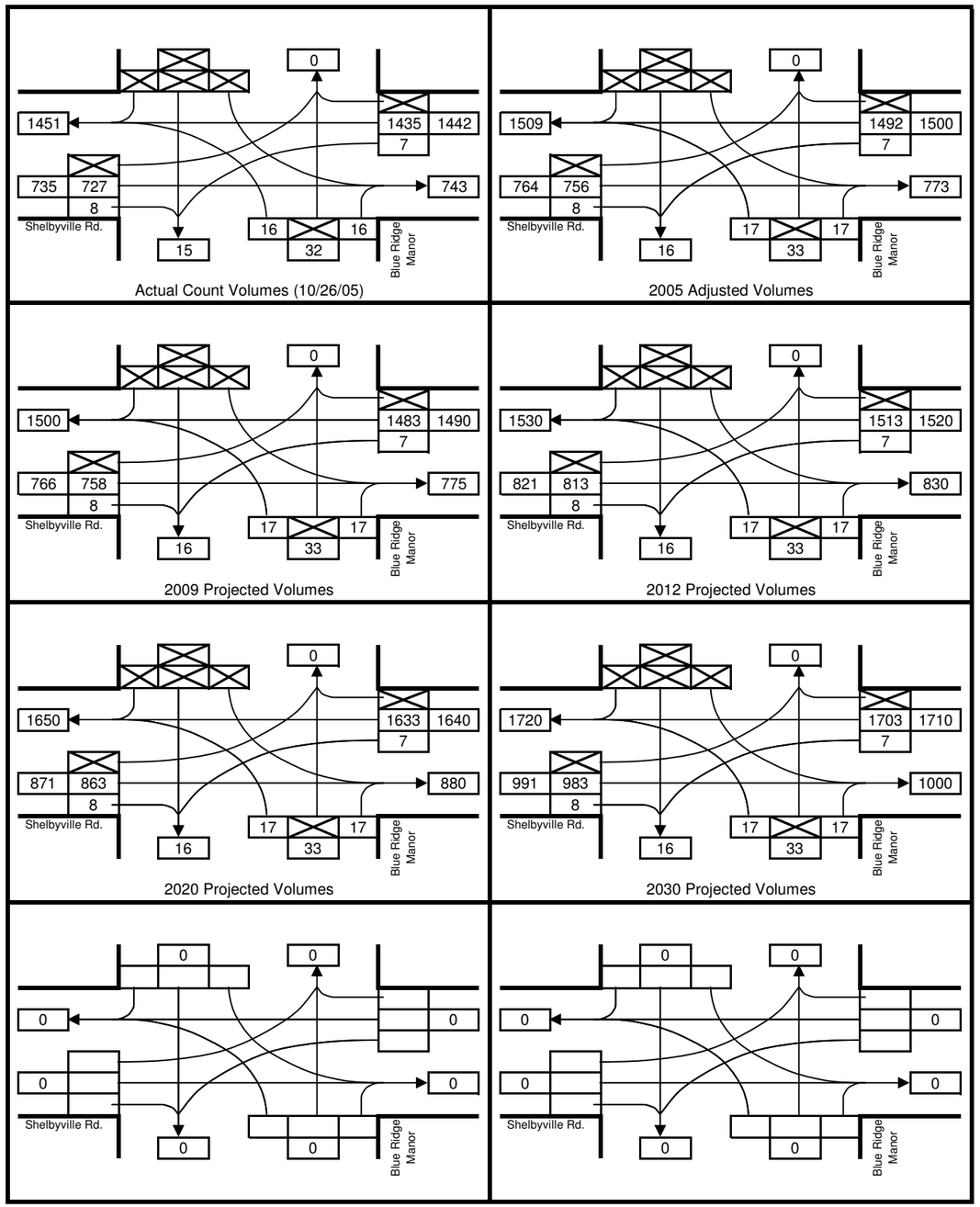

Shelbyville Rd. & Blue Ridge Manor
PM Peak Hour

N

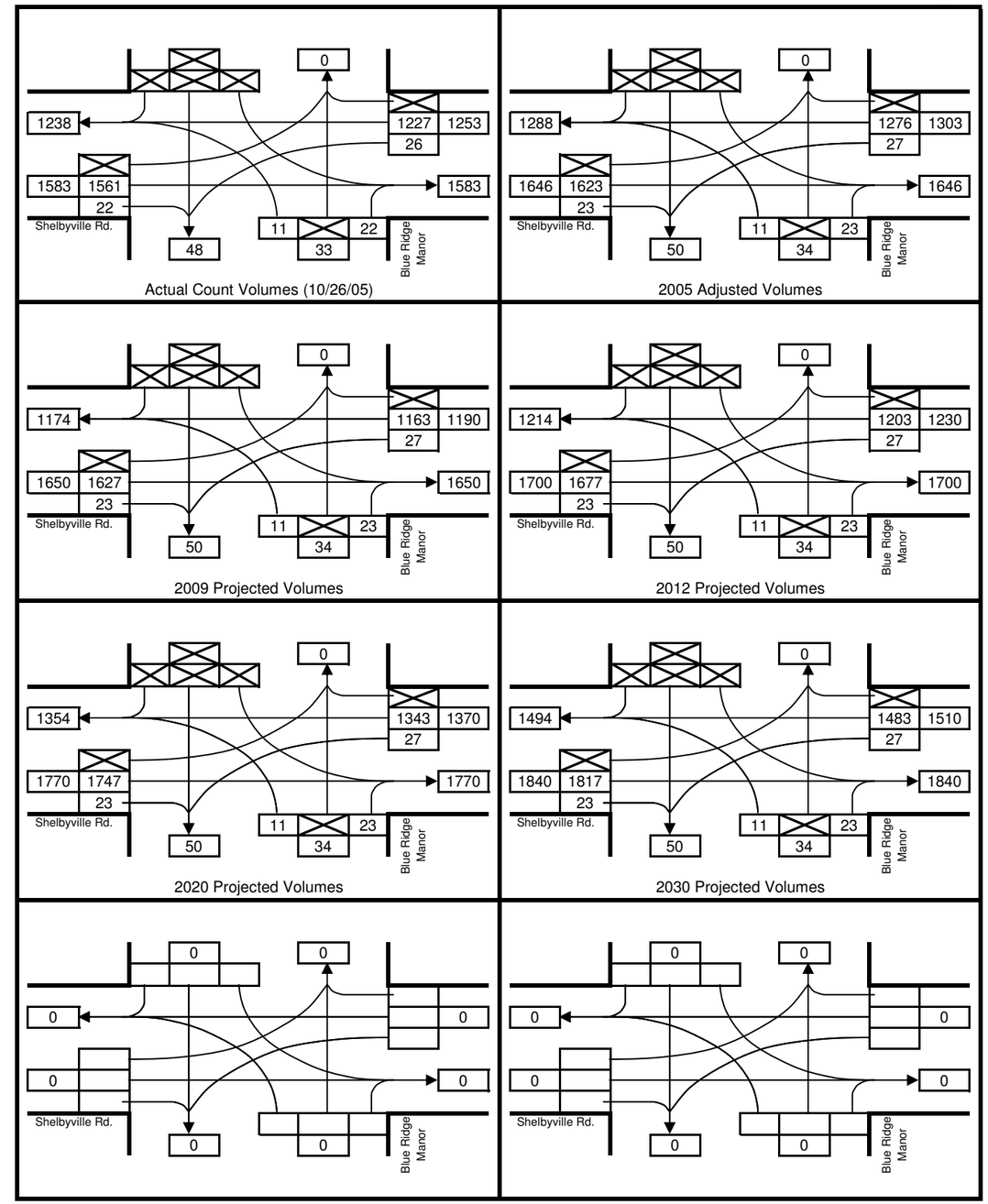

Turning Movement Summary

Shelbyville Rd. & Dorsey Ln.
AM Peak Hour

N

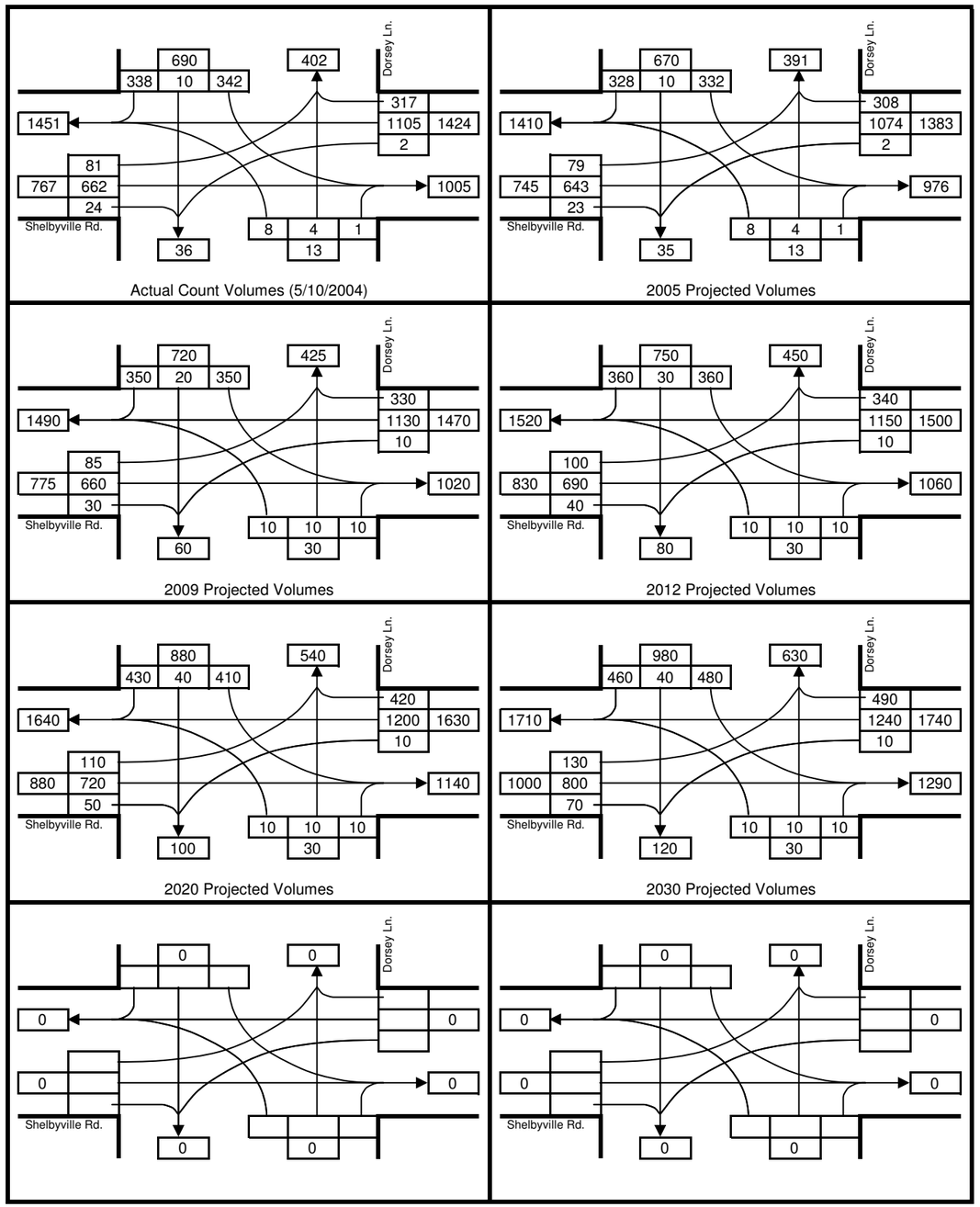

Shelbyville Rd. & Dorsey Ln.
PM Peak Hour

N

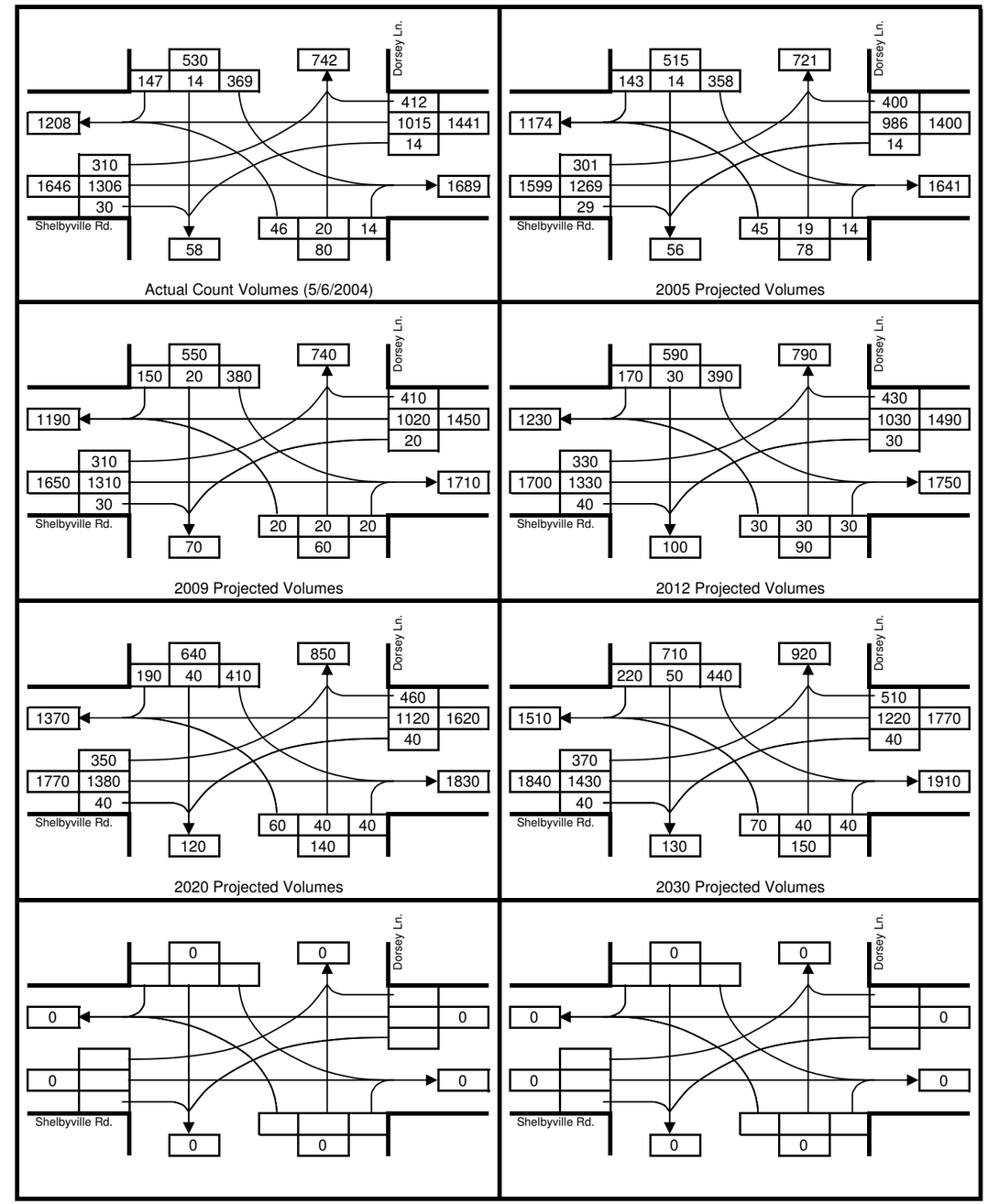

Turning Movement Summary

Shelbyville Rd. & Moser Rd. / La Fontenay Dr.
AM Peak Hour

N

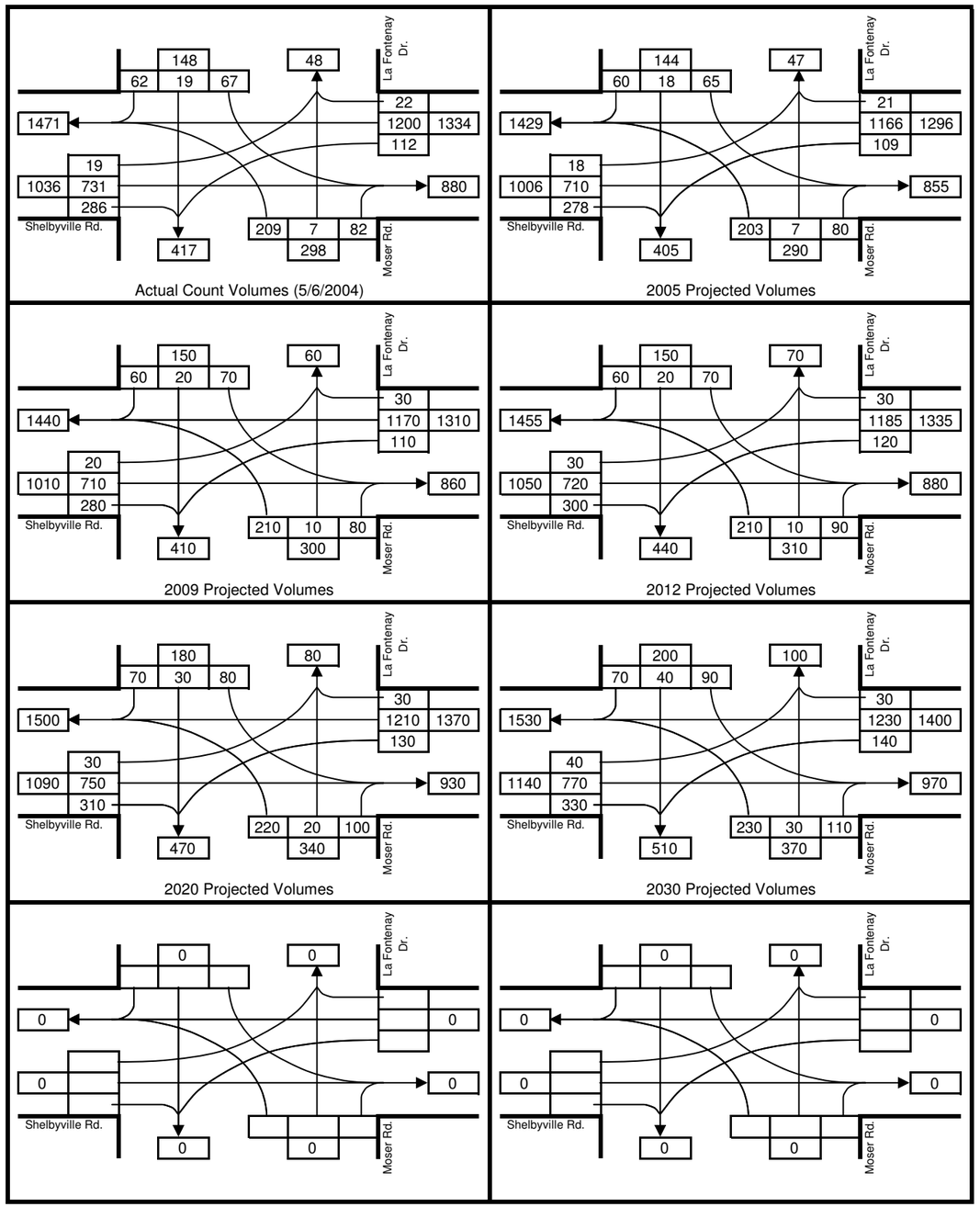

Shelbyville Rd. & Moser Rd. / La Fontenay Dr.
PM Peak Hour

N

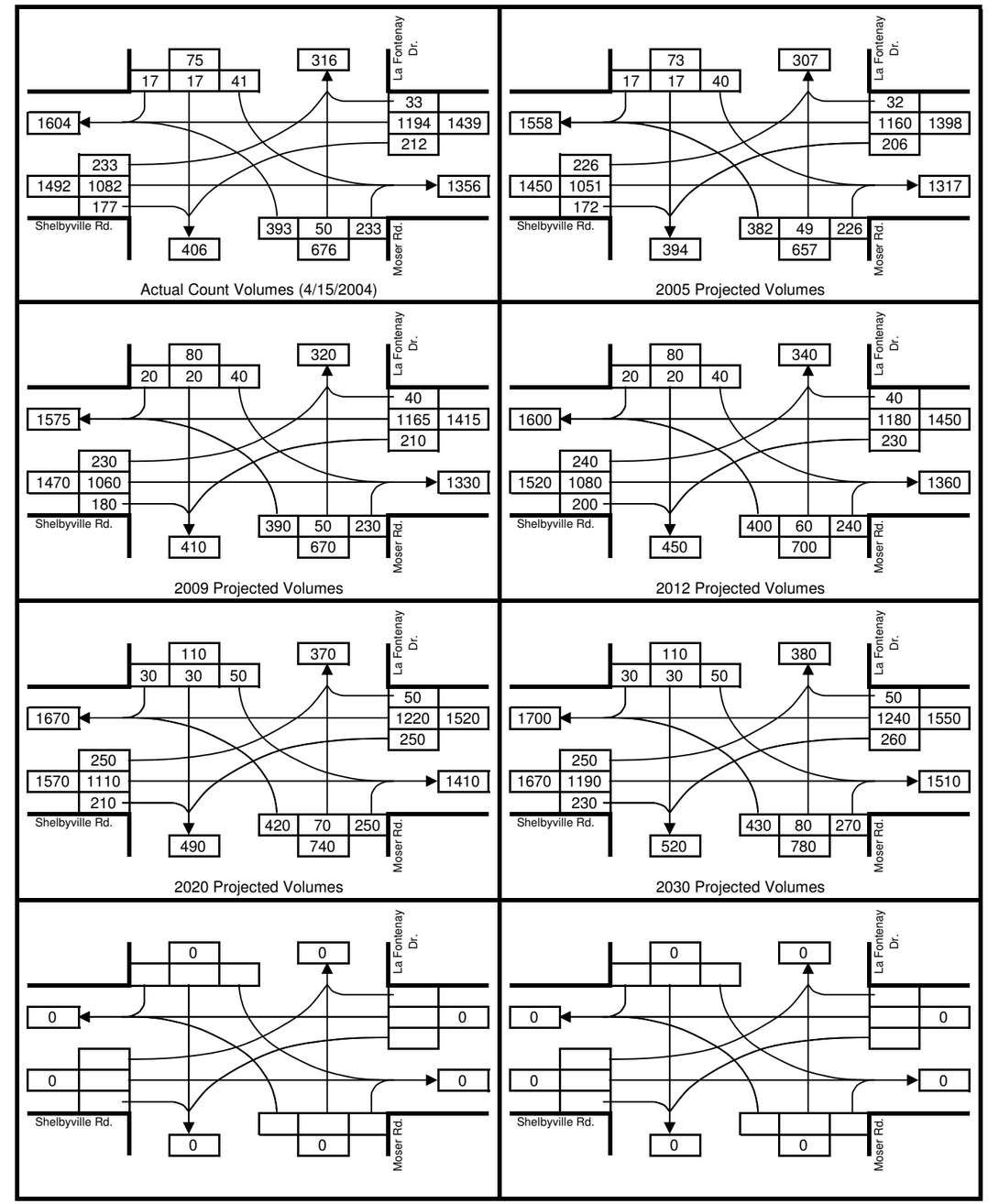

Turning Movement Summary

Taylorsville Rd. & Stony Brook Dr. / Blowing Tree Rd.
AM Peak Hour

N

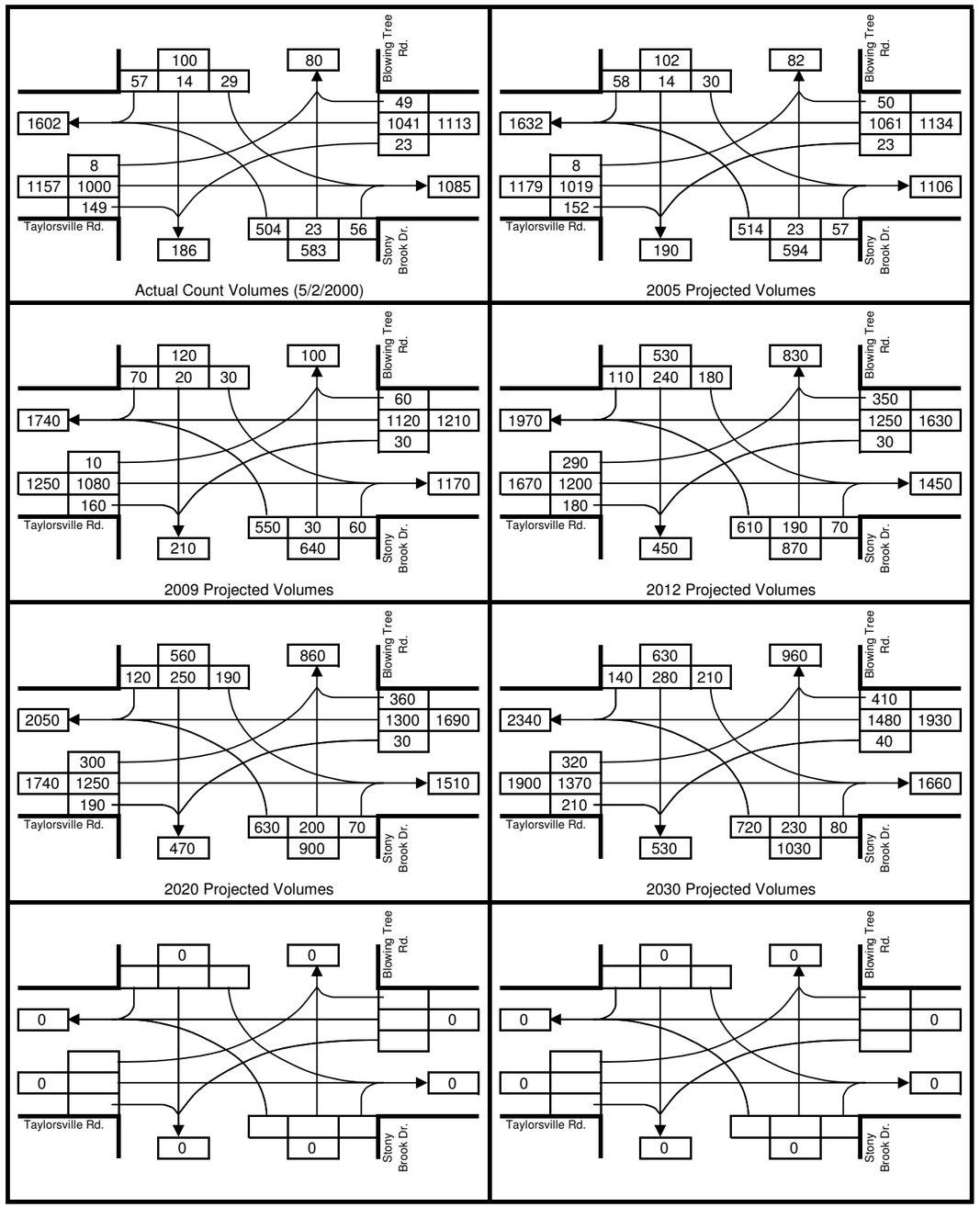

Taylorsville Rd. & Stony Brook Dr. / Blowing Tree Rd.
PM Peak Hour

N

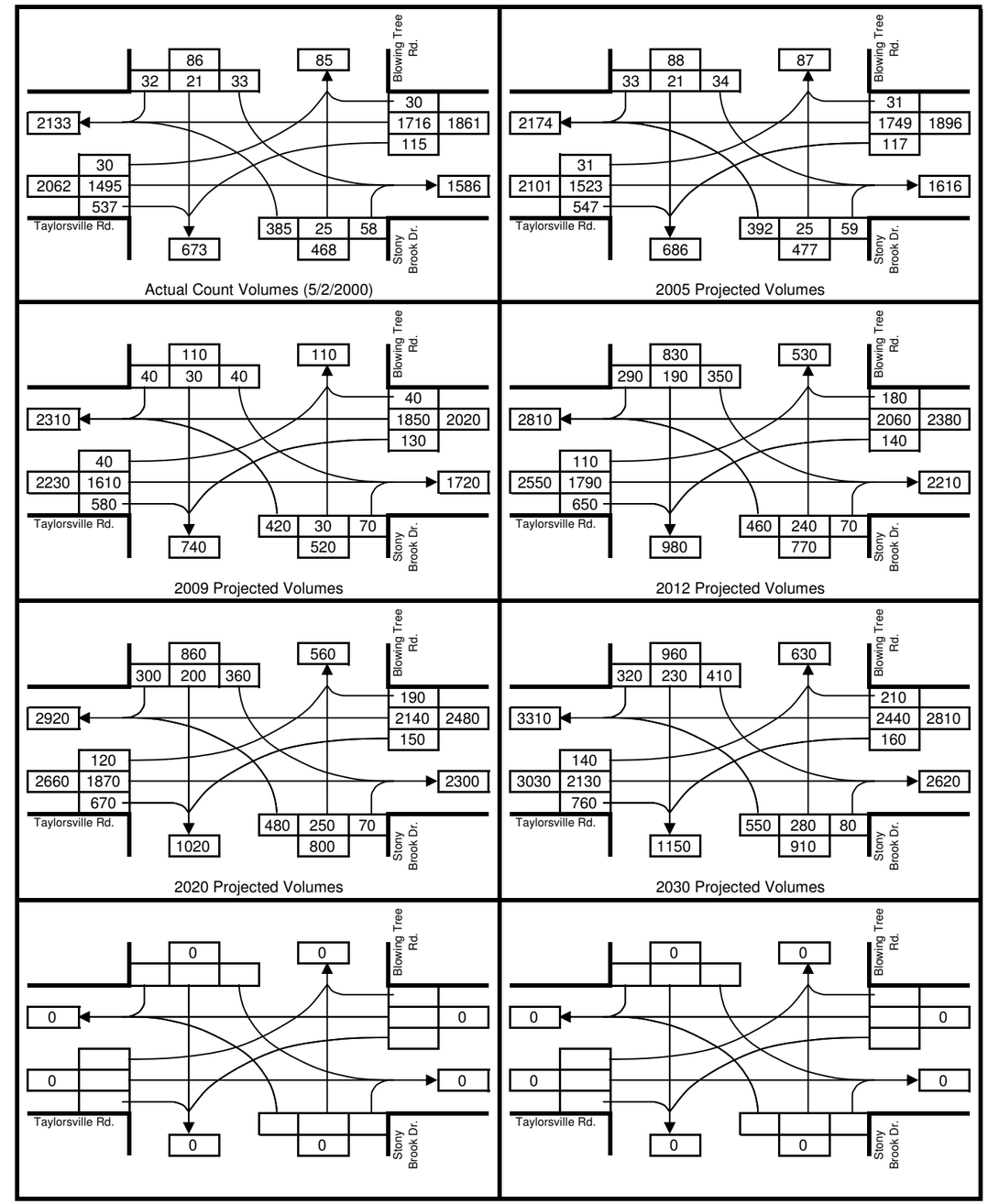

Turning Movement Summary

Taylorsville Rd. & Hurstbourne Pkwy.
AM Peak Hour

N

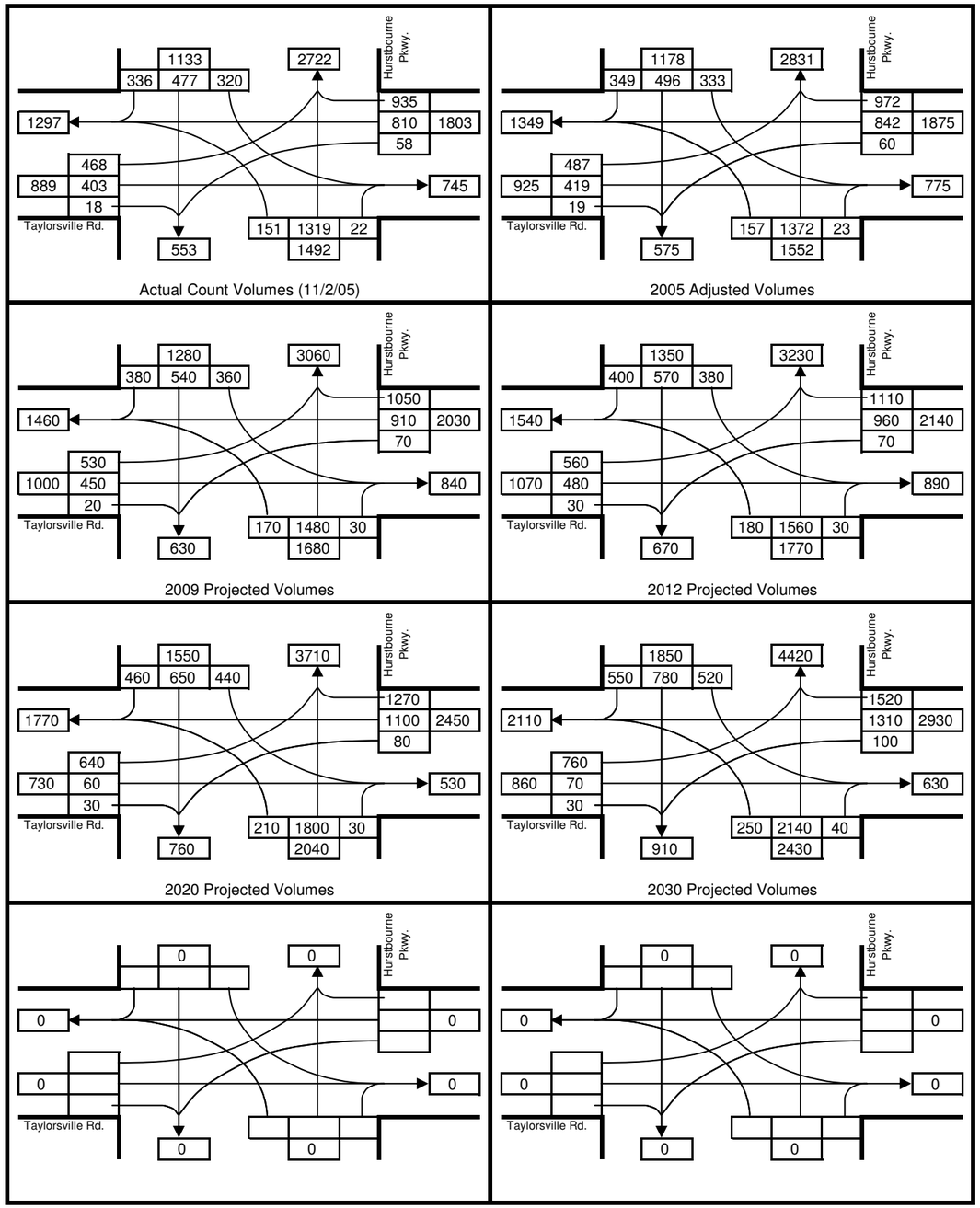

Taylorsville Rd. & Hurstbourne Pkwy.
PM Peak Hour

N

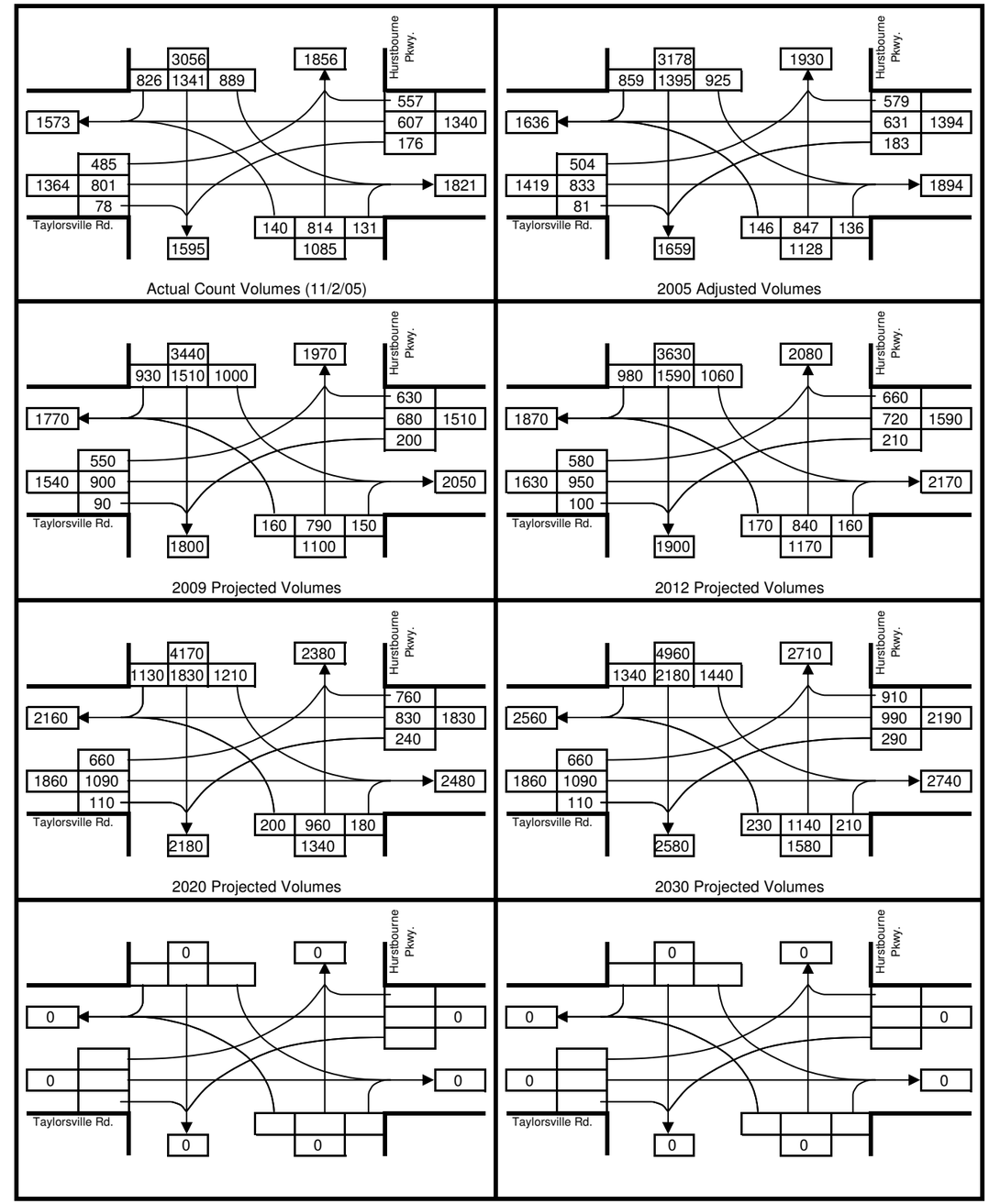

Turning Movement Summary

Bunsen Pkwy. & Hurstbourne Pkwy.
AM Peak Hour

N

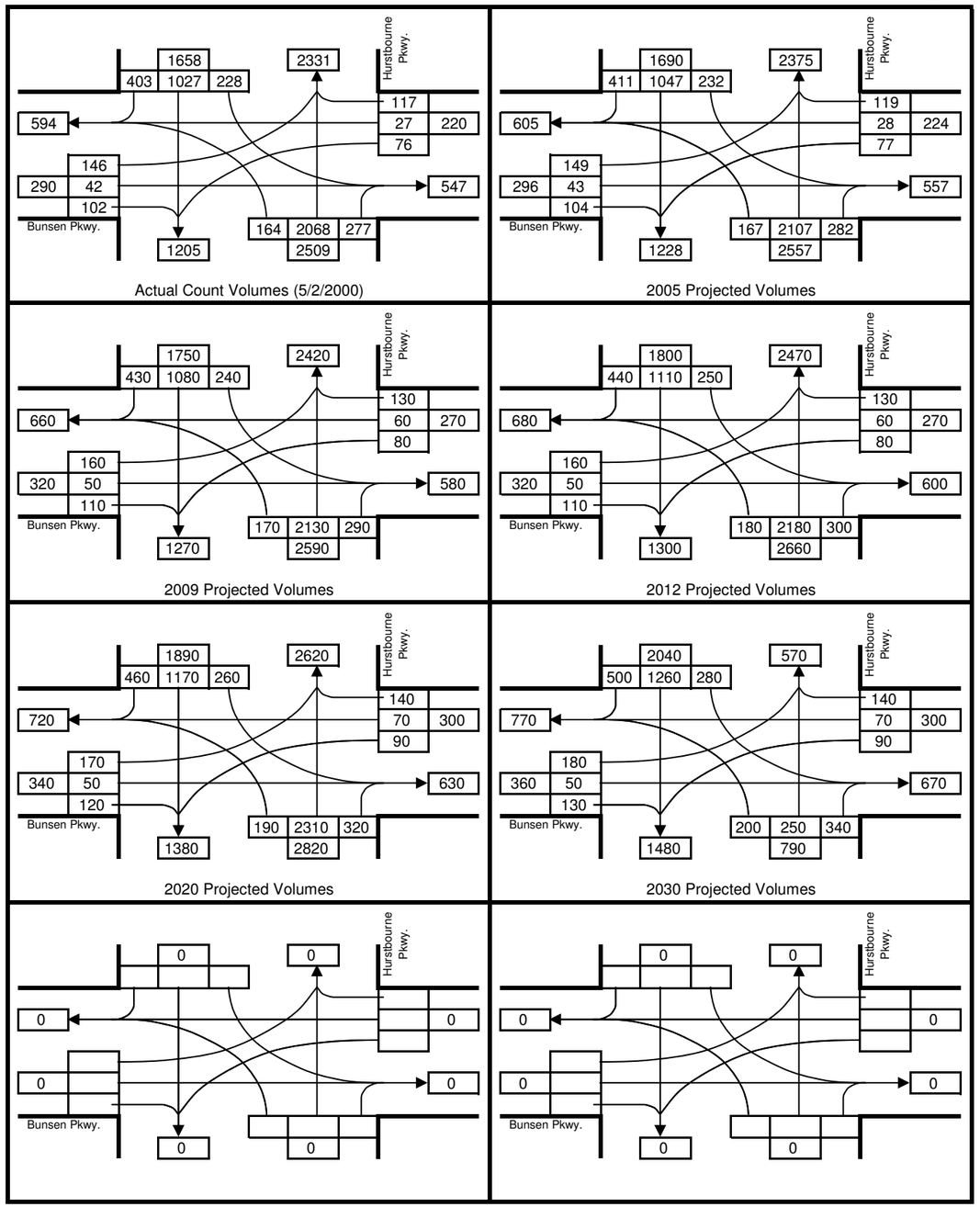

Bunsen Pkwy. & Hurstbourne Pkwy.
PM Peak Hour

N

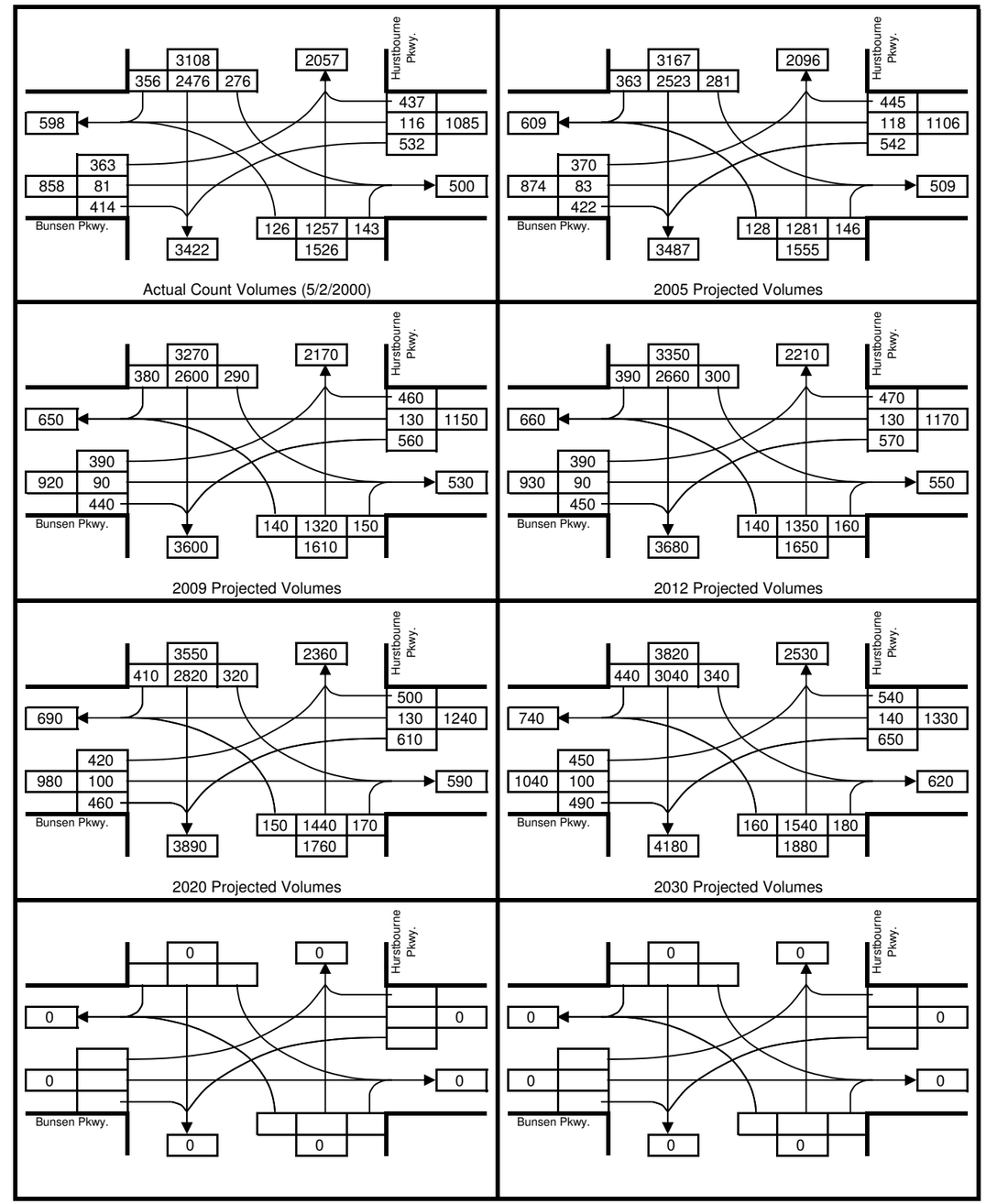

Turning Movement Summary

Linn Station Rd. & Hurstbourne Pkwy.
AM Peak Hour

N

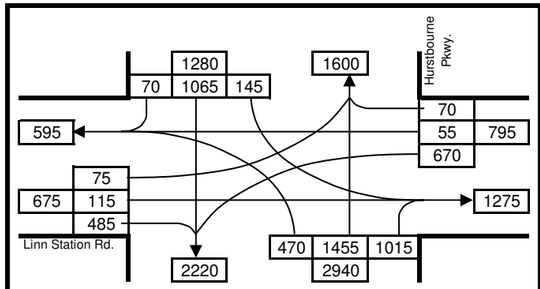

Actual Count Volumes (2003)

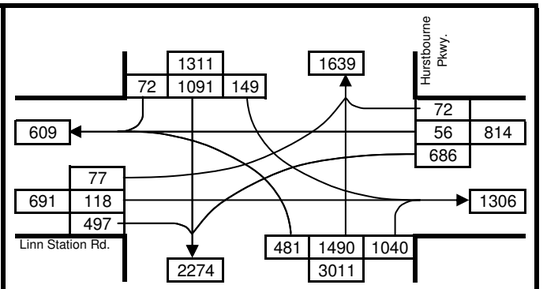

2005 Projected Volumes

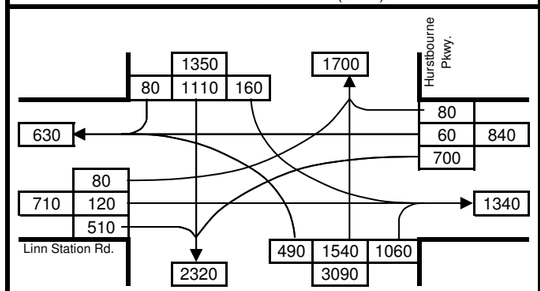

2009 Projected Volumes

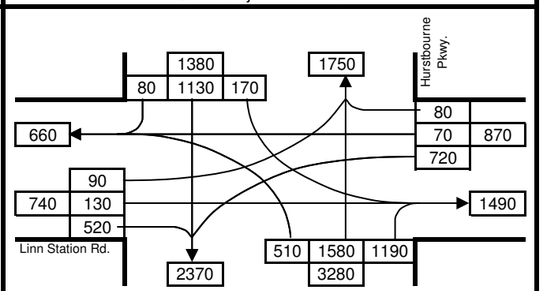

2012 Projected Volumes

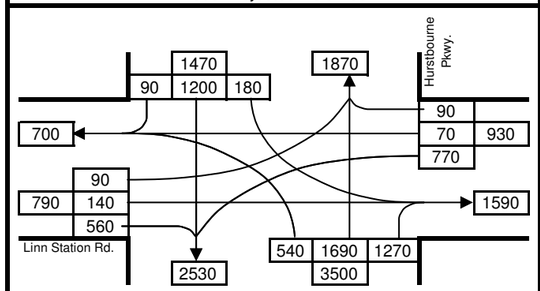

2020 Projected Volumes

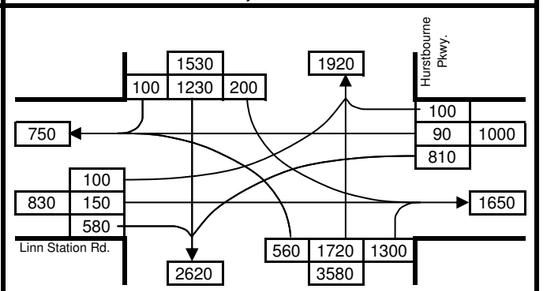

2030 Projected Volumes

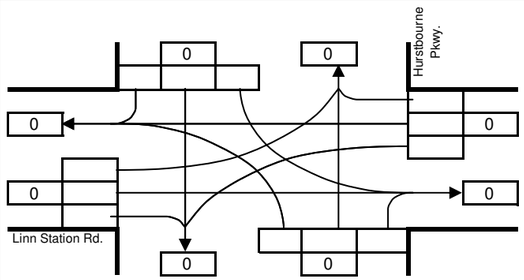

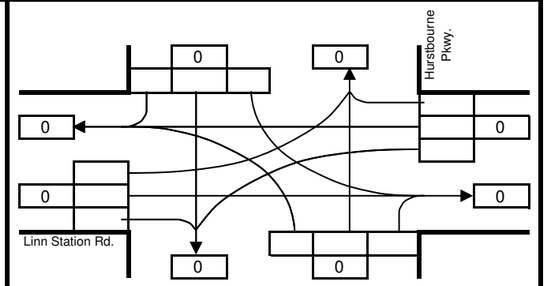

Linn Station Rd. & Hurstbourne Pkwy.
PM Peak Hour

N

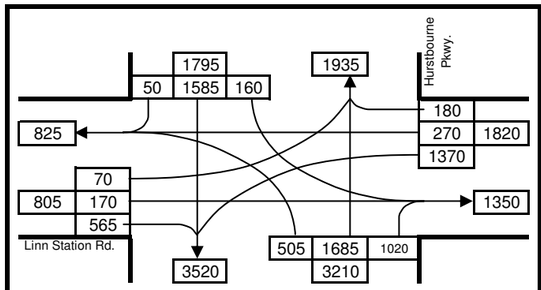

Actual Count Volumes (2003)

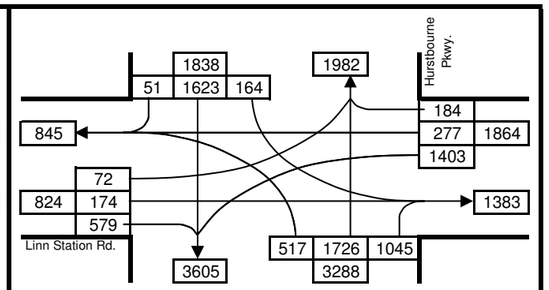

2005 Projected Volumes

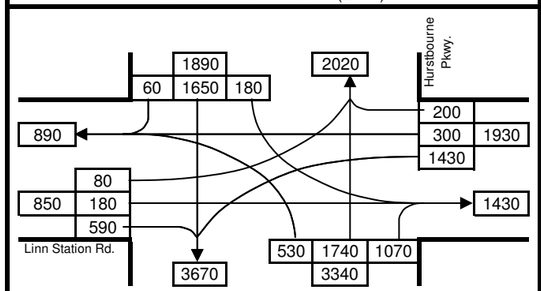

2009 Projected Volumes

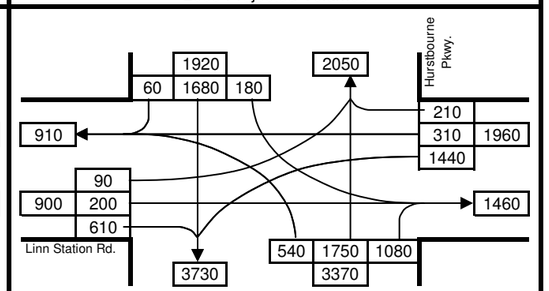

2012 Projected Volumes

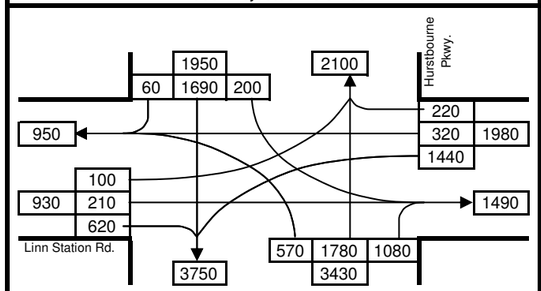

2020 Projected Volumes

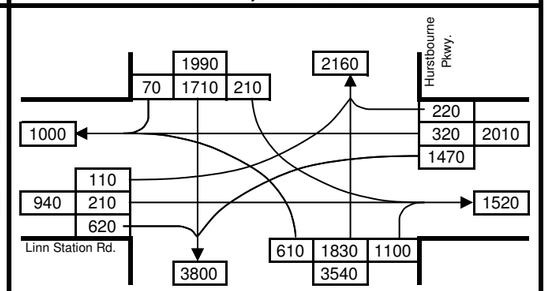

2030 Projected Volumes

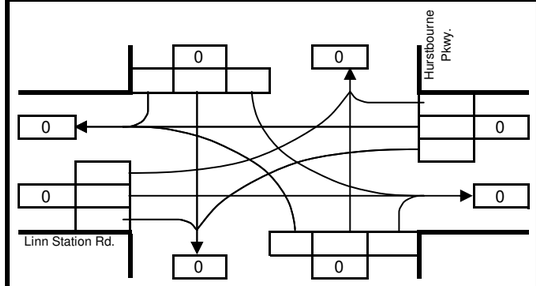

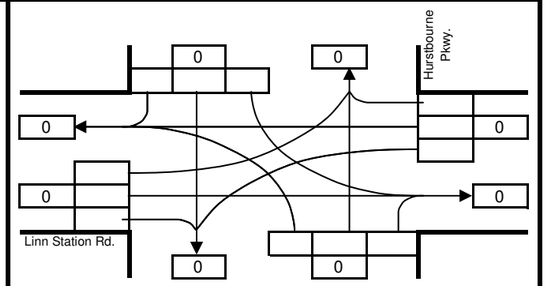

Turning Movement Summary

Timberwood Cir. & Hurstbourne Pkwy.
AM Peak Hour

N

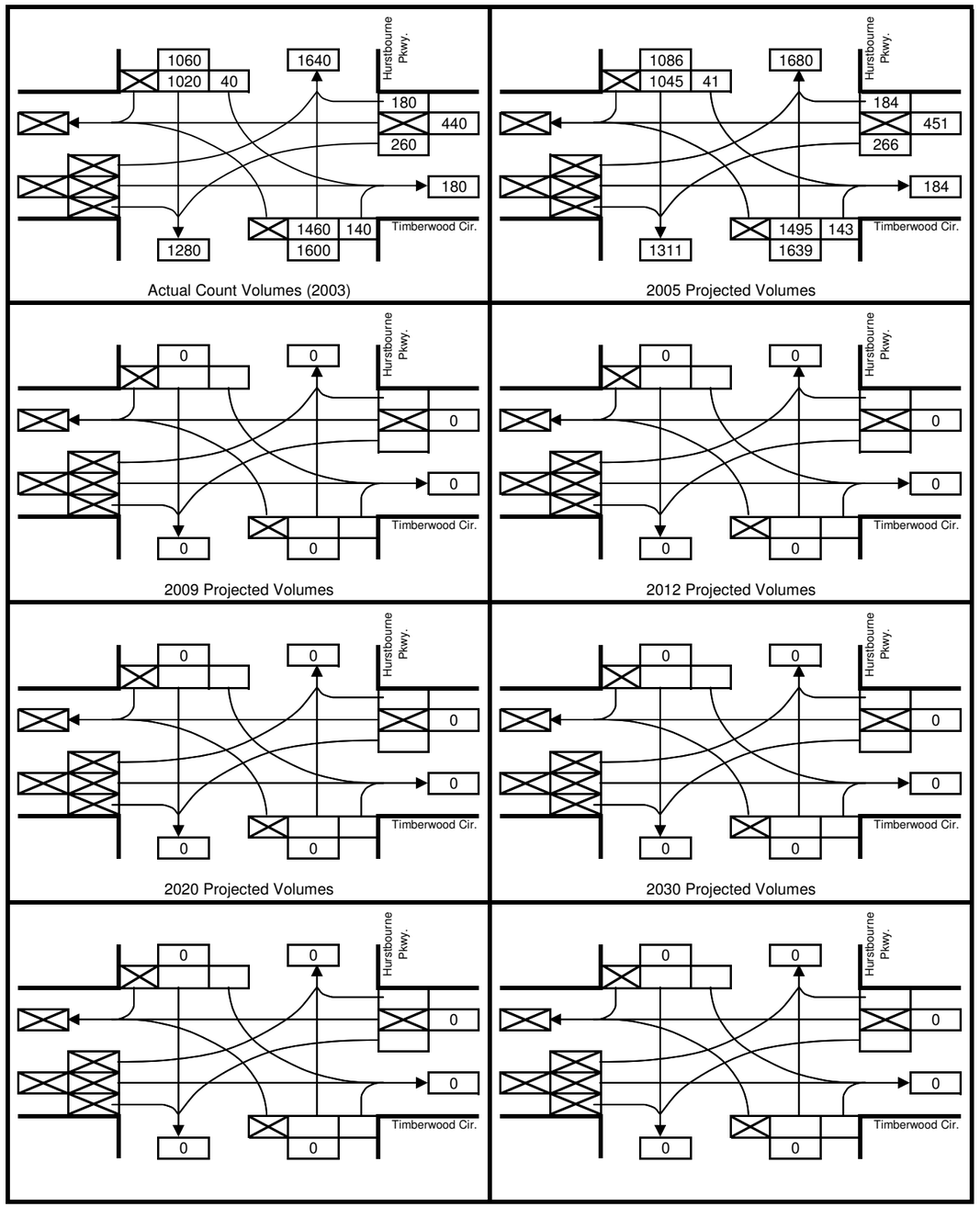

Timberwood Cir. & Hurstbourne Pkwy.
PM Peak Hour

N

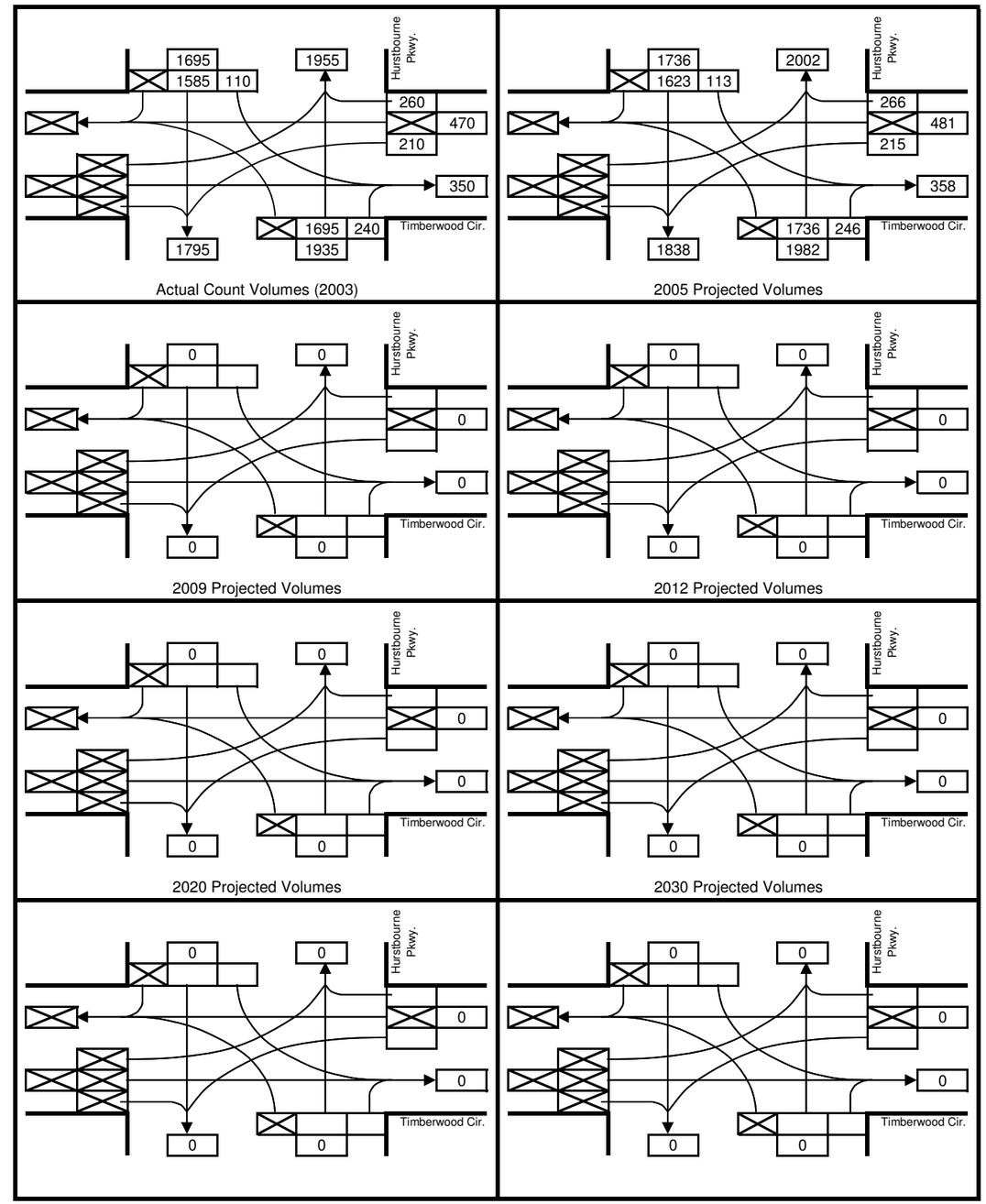

Turning Movement Summary

Whittington Pkwy. & Hurstbourne Pkwy.
AM Peak Hour

N

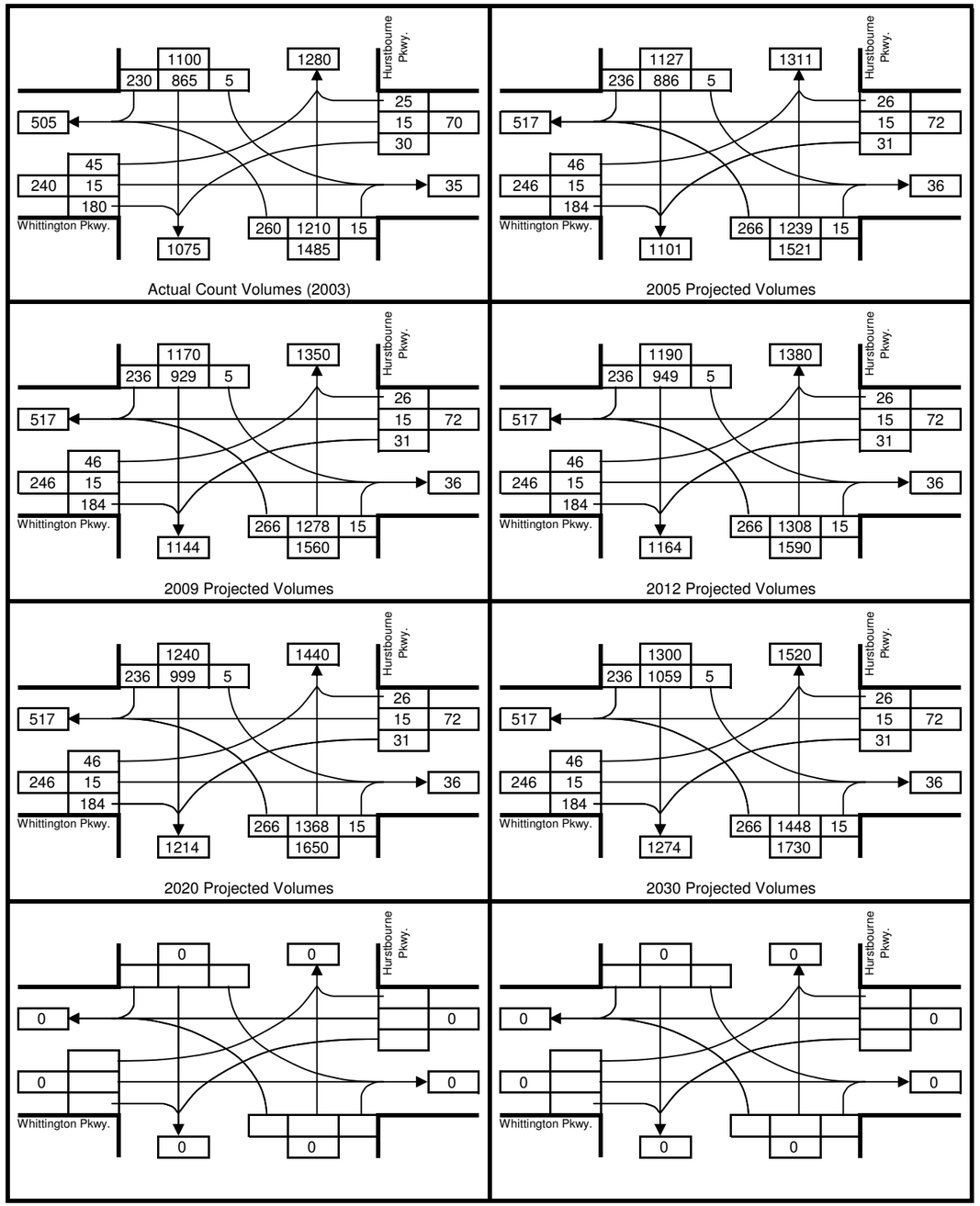

Whittington Pkwy. & Hurstbourne Pkwy.
PM Peak Hour

N

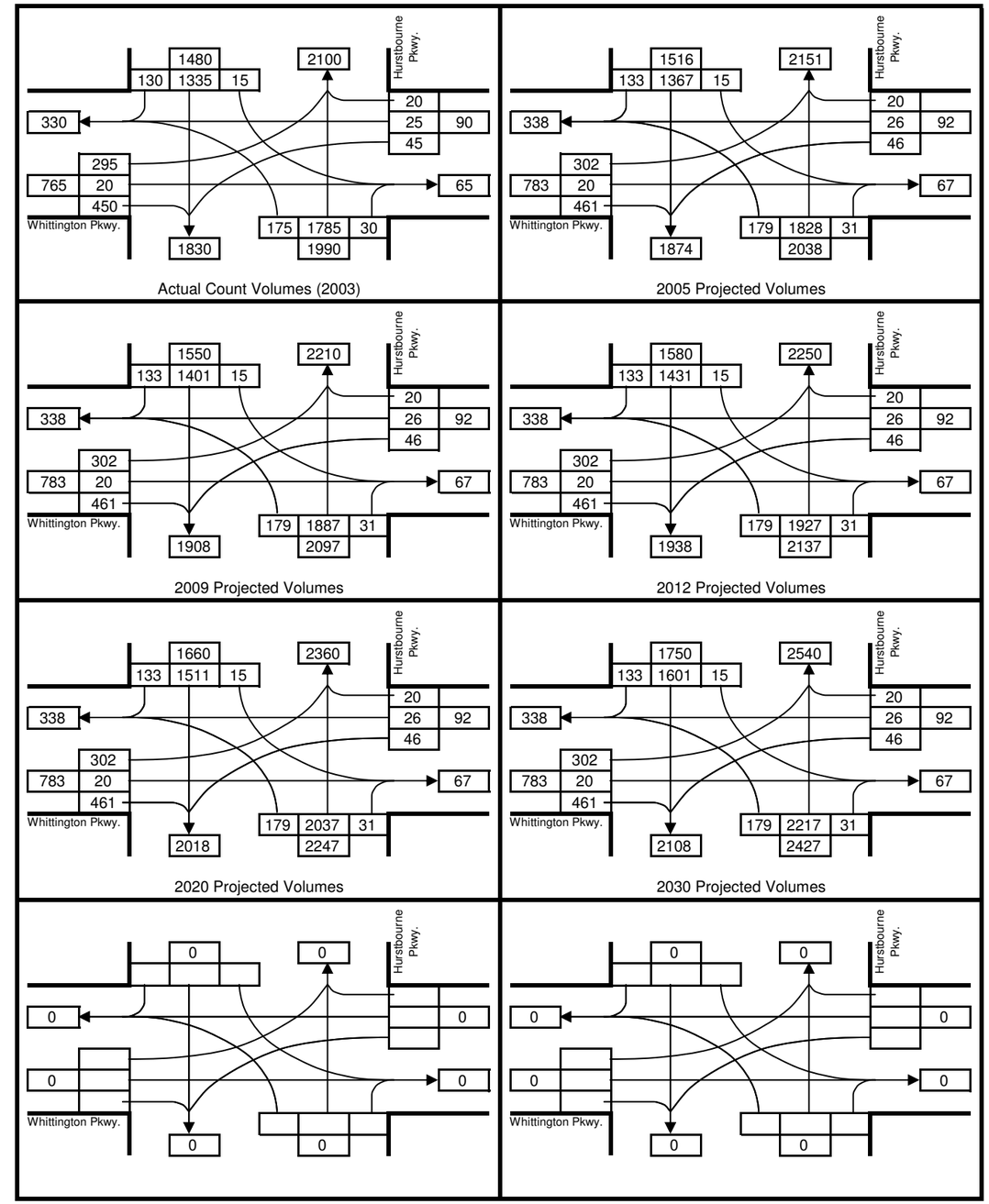

Turning Movement Summary

Tamarisk Pkwy. & Hurstbourne Pkwy.
AM Peak Hour

N

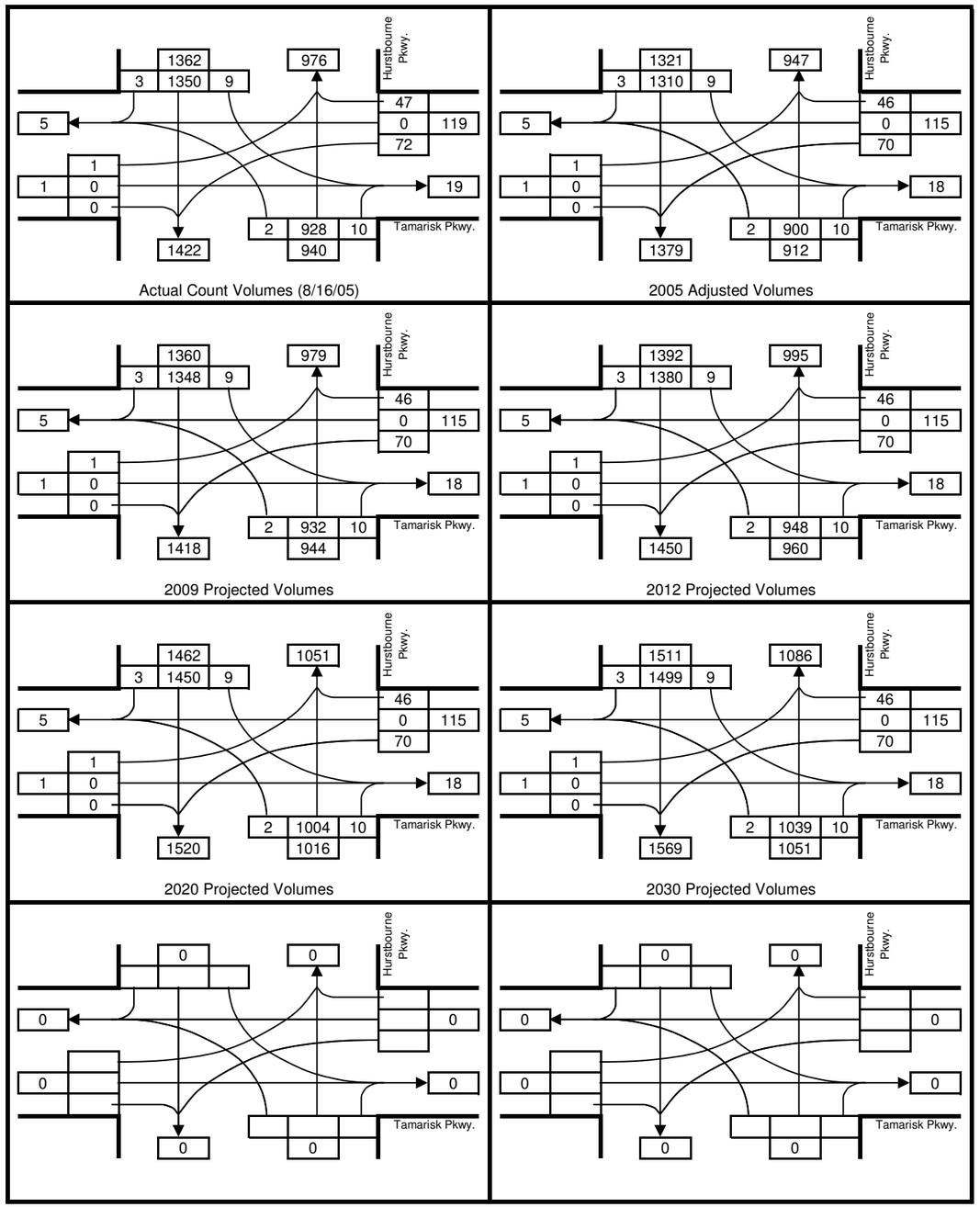

Tamarisk Pkwy. & Hurstbourne Pkwy.
PM Peak Hour

N

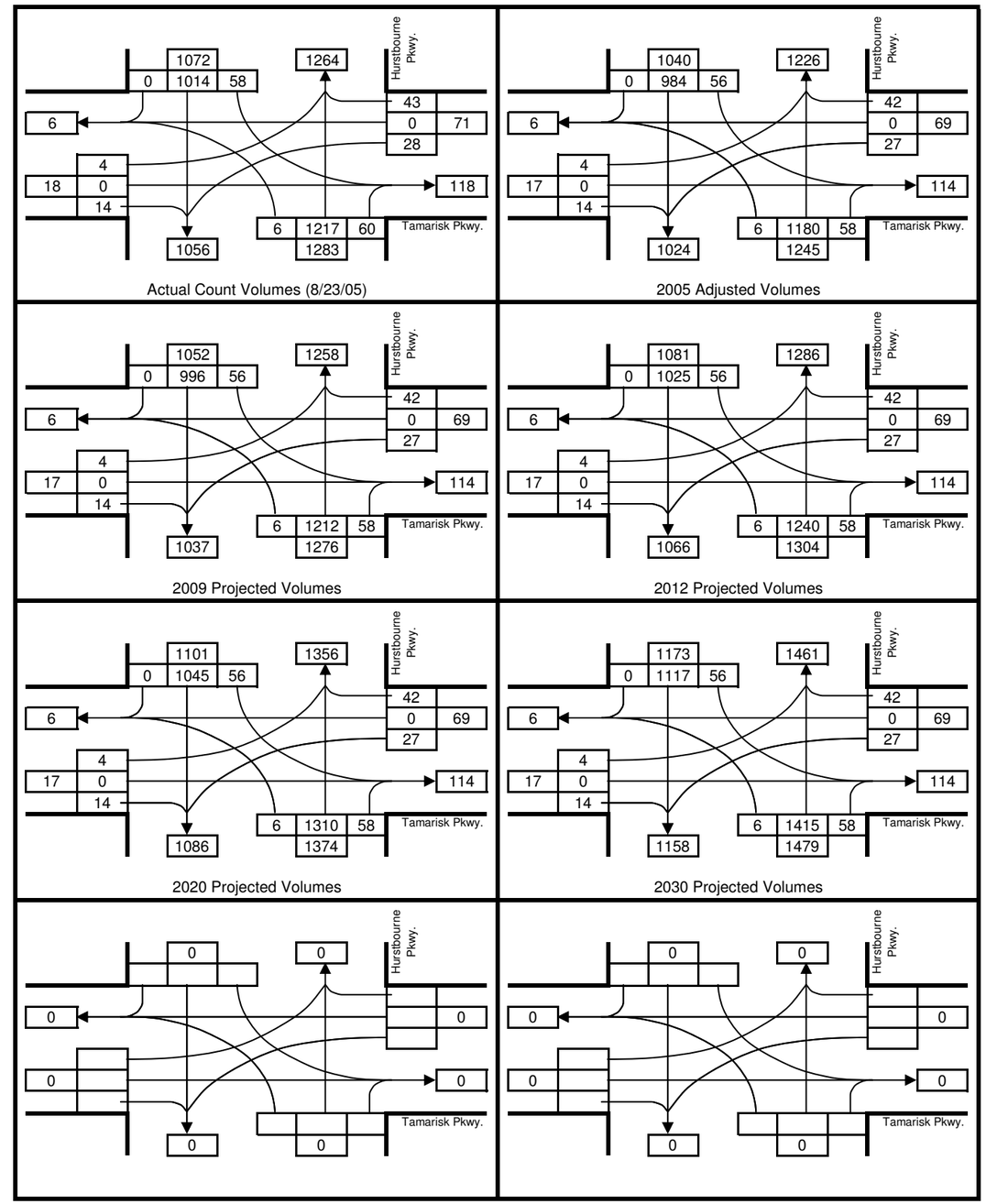

Turning Movement Summary

Westport Rd. & Hurstbourne Pkwy.
AM Peak Hour

N

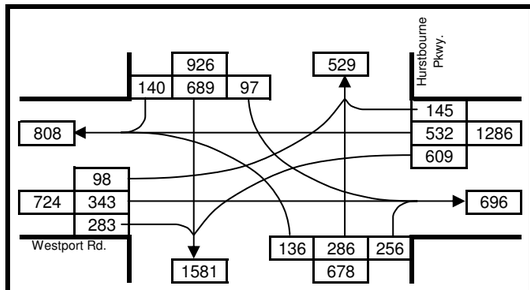

Actual Count Volumes (11/3/05)

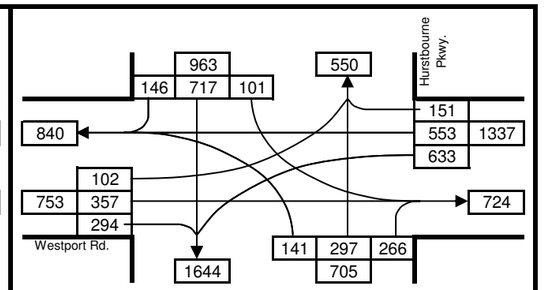

2005 Adjusted Volumes

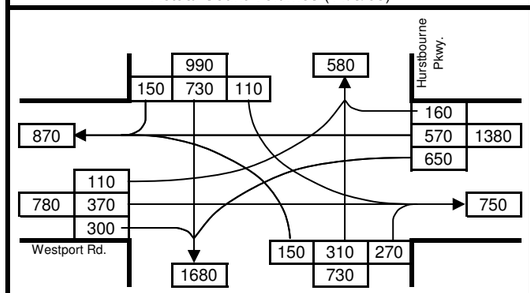

2009 Projected Volumes

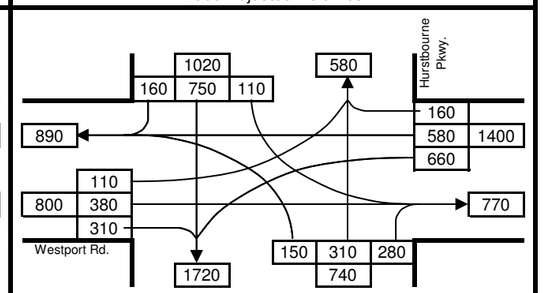

2012 Projected Volumes

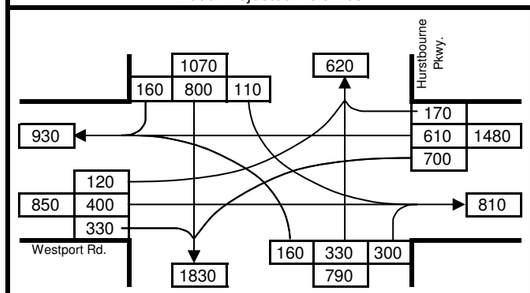

2020 Projected Volumes

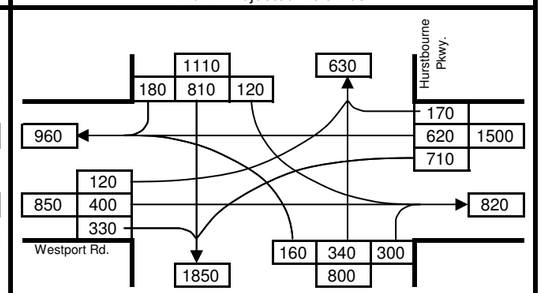

2030 Projected Volumes

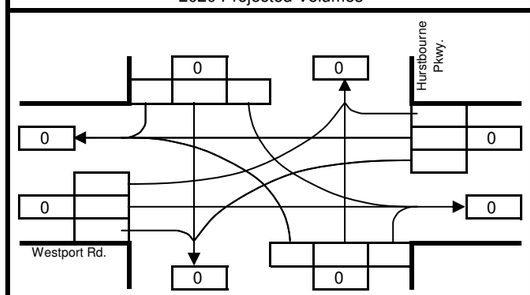

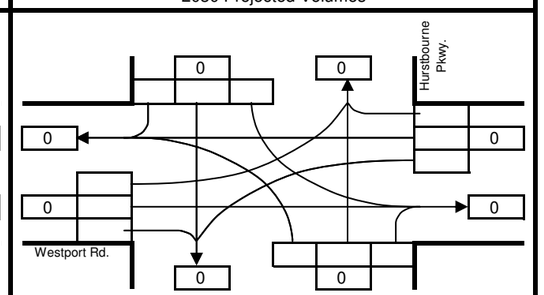

Westport Rd. & Hurstbourne Pkwy.
PM Peak Hour

N

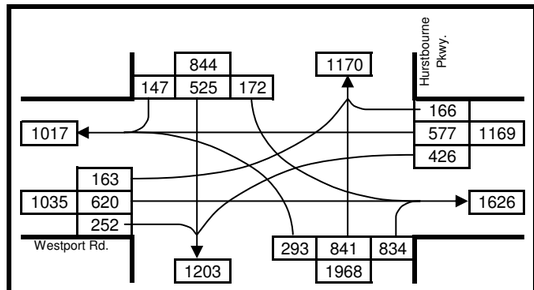

Actual Count Volumes (11/3/05)

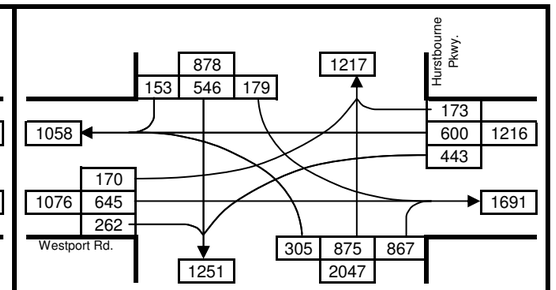

2005 Adjusted Volumes

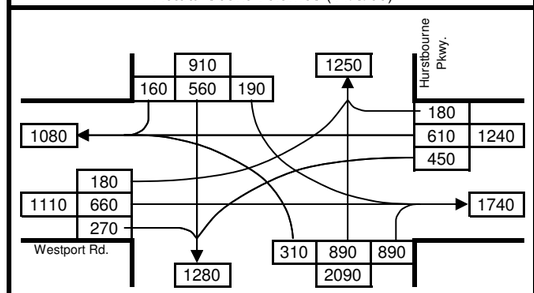

2009 Projected Volumes

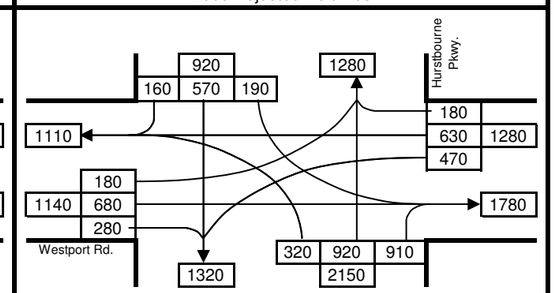

2012 Projected Volumes

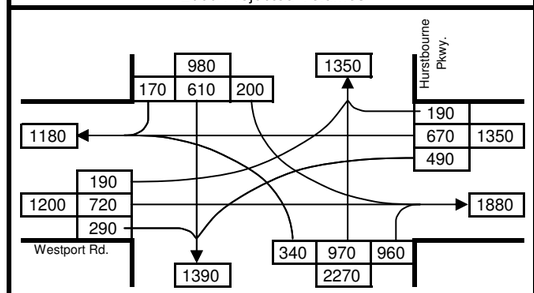

2020 Projected Volumes

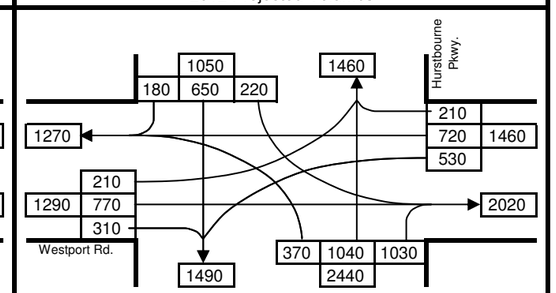

2030 Projected Volumes

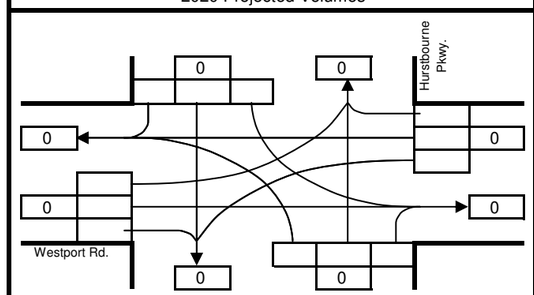

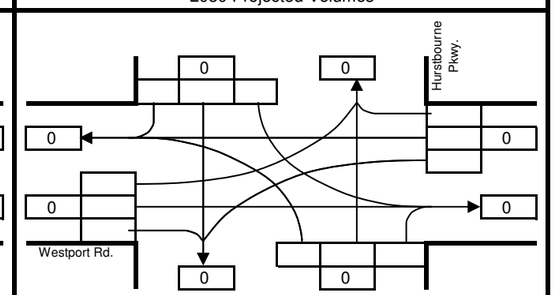

APPENDIX D

Traffic Analysis Software Output

HCS+: Signalized Intersections Release 5.2

Analyst:
Agency: Gresham Smith and Partners
Date: 1/23/2006
Period: A.M
Project ID: Optimized
E/W St: Linn Station

Inter.: Linn Station/Hurstbourne Pkwy
Area Type: All other areas
Jurisd:
Year : 2005

N/S St: Hurstbourne Pkwy

SIGNALIZED INTERSECTION SUMMARY

	Eastbound			Westbound			Northbound			Southbound		
	L	T	R	L	T	R	L	T	R	L	T	R
No. Lanes	1	1	1	2	1	1	2	2	1	2	3	0
LGConfig	L	LT	R	L	T	R	L	T	R	L	TR	
Volume	77	118	497	686	56	72	481	1490	1040	149	1091	72
Lane Width	12.0	12.0	12.0	12.0	12.0	12.0	12.0	12.0	12.0	12.0	12.0	
RTOR Vol			301			64			403			49

Duration 0.25 Area Type: All other areas

Signal Operations

Phase Combination	1	2	3	4	5	6	7	8
EB Left	A				A	A		
Thru	A					A	A	
Right	A					A	A	
Peds	X					X	X	
WB Left		A			A			
Thru		A					A	
Right		A					A	
Peds		X					X	
NB Right								
SB Right								
Green	19.3	31.0			6.4	44.2	44.1	
Yellow	5.0	5.0			5.0	5.0	5.0	
All Red	2.0	2.0			2.0	2.0	2.0	

Cycle Length: 180.0 secs

Intersection Performance Summary

Appr/ Lane Grp	Lane Group Capacity	Adj Sat Flow Rate (s)	Ratios v/c	Ratios g/C	Lane Group Delay	Lane Group LOS	Approach Delay	Approach LOS
Eastbound								
L	194	1805	0.44	0.11	76.9	E		
LT	204	1900	0.64	0.11	83.8	F	158.4	F
R	173	1615	1.26	0.11	235.4	F		
Westbound								
L	604	3505	1.26	0.17	205.2	F		
T	327	1900	0.19	0.17	64.0	E	193.1	F
R	278	1615	0.03	0.17	62.1	E		
Northbound								
L	1122	3505	0.48	0.32	49.4	D		
T	1916	3618	0.86	0.53	41.1	D	42.9	D
R	855	1615	0.83	0.53	42.3	D		
Southbound								
L	125	3505	1.33	0.04	279.1	F		
TR	1264	5159	0.98	0.24	87.9	F	110.6	F

Intersection Delay = 91.5 (sec/veh) Intersection LOS = F

HCS+: Signalized Intersections Release 5.2

Analyst:
Agency: Gresham Smith and Partners
Date: 1/23/2006
Period: P.M
Project ID: Optimized
E/W St: Linn Station

Inter.: Linn Station/Hurstbourne Pkwy
Area Type: All other areas
Jurisd:
Year : 2005

N/S St: Hurstbourne Pkwy

SIGNALIZED INTERSECTION SUMMARY

	Eastbound			Westbound			Northbound			Southbound		
	L	T	R	L	T	R	L	T	R	L	T	R
No. Lanes	1	1	1	2	1	1	2	2	1	2	3	0
LGConfig	L	LT	R	L	T	R	L	T	R	L	TR	
Volume	72	174	579	1403	277	184	517	1726	1045	164	1623	51
Lane Width	12.0	12.0	12.0	12.0	12.0	12.0	12.0	12.0	12.0	12.0	12.0	
RTOR Vol			293			100			697			1

Duration 0.25 Area Type: All other areas

Signal Operations

Phase Combination	1	2	3	4	5	6	7	8
EB Left	A				A	A		
Thru	A					A	A	
Right	A					A	A	
Peds	X					X	X	
WB Left		A			A			
Thru		A					A	
Right		A					A	
Peds		X					X	
NB Right								
SB Right								
Green	19.6	43.8			7.2	10.1	64.3	
Yellow	5.0	5.0			5.0	5.0	5.0	
All Red	2.0	2.0			2.0	2.0	2.0	

Cycle Length: 180.0 secs

Intersection Performance Summary

Appr/ Lane Grp	Lane Group Capacity	Adj Sat Flow Rate (s)	Ratios v/c	Ratios g/C	Lane Group Delay	Lane Group LOS	Approach Delay	Approach LOS
Eastbound								
L	197	1805	0.41	0.11	76.1	E		
LT	207	1900	0.93	0.11	123.4	F	300.8	F
R	176	1615	1.81	0.11	464.9	F		
Westbound								
L	853	3505	1.83	0.24	445.2	F		
T	462	1900	0.67	0.24	65.2	E	366.9	F
R	393	1615	0.24	0.24	55.0-	D		
Northbound								
L	473	3505	1.21	0.13	192.1	F		
T	1636	3618	1.17	0.45	133.7	F	132.3	F
R	730	1615	0.53	0.45	36.3	D		
Southbound								
L	140	3505	1.30	0.04	263.8	F		
TR	1840	5152	1.01	0.36	81.4	F	97.7	F

Intersection Delay = 197.7 (sec/veh) Intersection LOS = F

HCS+: Signalized Intersections Release 5.2

Analyst:
Agency: Gresham Smith and Partners
Date: 1/23/2006
Period: A.M
Project ID: Optimized
E/W St: Shelbyville Rd

Inter.: Shelbyville Rd/ 8 Mile Center
Area Type: All other areas
Jurisd:
Year : 2005
N/S St: 8 Mile Center

SIGNALIZED INTERSECTION SUMMARY

	Eastbound			Westbound			Northbound			Southbound		
	L	T	R	L	T	R	L	T	R	L	T	R
No. Lanes	1	2	0	1	2	1	0	1	0	1	1	0
LGConfig	L	TR		L	T	R		LTR		L	TR	
Volume	28	1961	6	6	1953	9	7	1	3	12	0	25
Lane Width	12.0	12.0		12.0	12.0	12.0		12.0		12.0	12.0	
RTOR Vol			0			0			0			0

Duration 0.25 Area Type: All other areas

Signal Operations

Phase Combination	1	2	3	4	5	6	7	8
EB Left	A				NB Left	A		
Thru		A			Thru	A		
Right		A			Right	A		
Peds					Peds			
WB Left	A				SB Left	A		
Thru		A			Thru	A		
Right		A			Right	A		
Peds					Peds	X		
NB Right					EB Right			
SB Right					WB Right			
Green	5.2	85.8			5.0			
Yellow	4.0	4.0			4.0			
All Red	0.0	1.0			1.0			

Cycle Length: 110.0 secs

Intersection Performance Summary

Appr/ Lane Grp	Lane Group Capacity	Adj Sat Flow Rate (s)	Ratios v/c	Ratios g/C	Lane Group Delay	Lane Group LOS	Approach Delay	Approach LOS
Eastbound								
L	85	1805	0.36	0.05	53.4	D		
TR	2820	3616	0.78	0.78	8.1	A	8.8	A
Westbound								
L	85	1805	0.08	0.05	50.5	D		
T	2822	3618	0.77	0.78	8.0	A	8.1	A
R	1260	1615	0.01	0.78	2.7	A		
Northbound								
LTR	65	1436	0.18	0.05	51.9	D	51.9	D
Southbound								
L	69	1520	0.19	0.05	51.9	D		
TR	73	1615	0.38	0.05	54.3	D	53.6	D

Intersection Delay = 9.0 (sec/veh) Intersection LOS = A

HCS+: Signalized Intersections Release 5.2

Analyst:
Agency: Gresham Smith and Partners
Date: 1/23/2006
Period: P.M
Project ID: Optimization
E/W St: Shelbyville Rd

Inter.: Shelbyville Rd/ 8 Mile Center
Area Type: All other areas
Jurisd:
Year : 2005
N/S St: 8 Mile Center

SIGNALIZED INTERSECTION SUMMARY

	Eastbound			Westbound			Northbound			Southbound		
	L	T	R	L	T	R	L	T	R	L	T	R
No. Lanes	1	2	0	1	2	1	0	1	0	1	1	0
LGConfig	L	TR		L	T	R		LTR		L	TR	
Volume	23	2192	0	2	2168	8	6	0	2	16	1	39
Lane Width	12.0	12.0		12.0	12.0	12.0		12.0		12.0	12.0	
RTOR Vol			0			1			0			0

Duration 0.25 Area Type: All other areas

Signal Operations

Phase Combination	1	2	3	4	5	6	7	8
EB Left	A				NB Left	A		
Thru		A			Thru	A		
Right		A			Right	A		
Peds					Peds			
WB Left	A				SB Left	A		
Thru		A			Thru	A		
Right		A			Right	A		
Peds					Peds	X		
NB Right					EB Right			
SB Right					WB Right			
Green	5.0	135.5			5.5			
Yellow	4.0	4.0			4.0			
All Red	0.0	1.0			1.0			

Cycle Length: 160.0 secs

Intersection Performance Summary

Appr/ Lane Grp	Lane Group Capacity	Adj Sat Flow Rate (s)	Ratios v/c	Ratios g/C	Lane Group Delay	Lane Group LOS	Approach Delay	Approach LOS
Eastbound								
L	56	1805	0.46	0.03	82.2	F		
TR	3064	3618	0.80	0.85	7.3	A	8.1	A
Westbound								
L	56	1805	0.04	0.03	75.4	E		
T	3064	3618	0.79	0.85	7.0	A	7.1	A
R	1368	1615	0.01	0.85	1.9	A		
Northbound								
LTR	41	1191	0.22	0.03	77.9	E	77.9	E
Southbound								
L	49	1428	0.37	0.03	80.2	F		
TR	56	1621	0.79	0.03	127.9	F	114.0	F

Intersection Delay = 9.0 (sec/veh) Intersection LOS = A

HCS+: Signalized Intersections Release 5.2

Analyst:
Agency: Gresham Smith and Partners
Date: 1/23/2006
Period: A.M
Project ID: Optimized
E/W St: Shelbyville Rd

Inter.: Shelbyville Rd/ Christian Way
Area Type: All other areas
Jurisd:
Year : 2005

N/S St: Christian Way

SIGNALIZED INTERSECTION SUMMARY

	Eastbound			Westbound			Northbound			Southbound		
	L	T	R	L	T	R	L	T	R	L	T	R
No. Lanes	1	2	1	1	2	0	1	1	1	0	1	0
LGConfig	L	T	R	L	TR		L	LT	R		LTR	
Volume	4	1964	63	38	1944	3	114	1	30	1	1	2
Lane Width	12.0	12.0	12.0	12.0	12.0		12.0	12.0	12.0		12.0	
RTOR Vol			22			0			28			2

Duration 0.25 Area Type: All other areas

Signal Operations

Phase Combination	1	2	3	4		5	6	7	8
EB Left	A	A			NB Left	A			
Thru		A			Thru	A			
Right		A			Right	A			
Peds					Peds	X			
WB Left	A				SB Left	A			
Thru	A	A			Thru	A			
Right	A	A			Right	A			
Peds					Peds				
NB Right					EB Right				
SB Right					WB Right				
Green	6.6	78.3				11.1			
Yellow	4.0	4.0				4.0			
All Red	0.0	1.0				1.0			

Cycle Length: 110.0 secs

Intersection Performance Summary

Appr/ Lane Grp	Lane Group Capacity	Adj Sat Flow Rate (s)	Ratios v/c	Ratios g/C	Lane Group Delay	Lane Group LOS	Approach Delay	Approach LOS
Eastbound								
L	88	109	0.05	0.81	2.3	A		
T	2575	3618	0.85	0.71	14.4	B	14.1	B
R	1150	1615	0.04	0.71	4.7	A		
Westbound								
L	108	1805	0.39	0.06	52.1	D		
TR	2923	3617	0.74	0.81	6.1	A	6.9	A
Northbound								
L	145	1437	0.88	0.10	89.6	F		
LT	192	1900	0.01	0.10	44.5	D	88.5	F
R	163	1615	0.01	0.10	44.5	D		
Southbound								
LTR	176	1743	0.01	0.10	44.5	D	44.5	D

Intersection Delay = 12.8 (sec/veh) Intersection LOS = B

HCS+: Signalized Intersections Release 5.2

Analyst:
Agency: Gresham Smith and Partners
Date: 1/23/2006
Period: P.M
Project ID: Optimized
E/W St: Shelbyville Rd

Inter.: Shelbyville Rd/ Christian Way
Area Type: All other areas
Jurisd:
Year : 2005

N/S St: Christian Way

SIGNALIZED INTERSECTION SUMMARY

	Eastbound			Westbound			Northbound			Southbound		
	L	T	R	L	T	R	L	T	R	L	T	R
No. Lanes	1	2	1	1	2	0	1	1	1	0	1	0
LGConfig	L	T	R	L	TR		L	LT	R		LTR	
Volume	5	2005	201	160	2053	0	262	1	210	0	1	7
Lane Width	12.0	12.0	12.0	12.0	12.0		12.0	12.0	12.0		12.0	
RTOR Vol			65			0			0			6

Duration 0.25 Area Type: All other areas

Signal Operations

Phase Combination	1	2	3	4		5	6	7	8
EB Left	A	A			NB Left	A			
Thru		A			Thru	A			
Right		A			Right	A			
Peds		X			Peds	X			
WB Left	A				SB Left	A			
Thru	A	A			Thru	A			
Right	A	A			Right	A			
Peds					Peds				
NB Right					EB Right				
SB Right					WB Right				
Green	13.9	104.4				27.7			
Yellow	4.0	4.0				4.0			
All Red	0.0	1.0				1.0			

Cycle Length: 160.0 secs

Intersection Performance Summary

Appr/ Lane Grp	Lane Group Capacity	Adj Sat Flow Rate (s)	Ratios v/c	Ratios g/C	Lane Group Delay	Lane Group LOS	Approach Delay	Approach LOS
Eastbound								
L	48	63	0.13	0.76	6.1	A		
T	2361	3618	0.94	0.65	33.8	C	32.3	C
R	1054	1615	0.14	0.65	10.7	B		
Westbound								
L	157	1805	1.13	0.09	185.3	F		
TR	2766	3618	0.82	0.76	14.2	B	26.6	C
Northbound								
L	249	1437	1.17	0.17	176.5	F		
LT	329	1900	0.00	0.17	54.7	D	134.7	F
R	280	1615	0.83	0.17	82.7	F		
Southbound								
LTR	307	1772	0.01	0.17	54.8	D	54.8	D

Intersection Delay = 39.7 (sec/veh) Intersection LOS = D

HCS+: Signalized Intersections Release 5.2

Analyst:
Agency: Gresham Smith and Partners
Date: 1/23/2006
Period: A.M
Project ID: Estimated
E/W St: Shelbyville Rd

Inter.: Shelbyville Rd/ Dorsey Ln
Area Type: All other areas
Jurisd:
Year : 2005

N/S St: Dorsey Ln

SIGNALIZED INTERSECTION SUMMARY

	Eastbound			Westbound			Northbound			Southbound		
	L	T	R	L	T	R	L	T	R	L	T	R
No. Lanes	1	2	1	1	2	0	1	1	0	1	1	1
LGConfig	L	T	R	L	TR		L	TR		L	T	R
Volume	79	643	23	2	1074	308	8	4	1	332	10	328
Lane Width	12.0	12.0	12.0	12.0	12.0		12.0	12.0		12.0	12.0	12.0
RTOR Vol			12			19			1			140

Duration 0.25 Area Type: All other areas

Signal Operations

Phase Combination	1	2	3	4		5	6	7	8
EB Left	A	A			NB Left	A			
Thru	A	A			Thru	A			
Right	A	A			Right	A			
Peds	X	X			Peds	X			
WB Left		A			SB Left	A			
Thru		A			Thru	A			
Right		A			Right	A			
Peds		X			Peds	X			
NB Right					EB Right				
SB Right					WB Right				
Green	10.0	51.6			30.0				
Yellow	4.0	4.3			4.0				
All Red	0.0	1.0			1.0				

Cycle Length: 105.9 secs

Intersection Performance Summary

Appr/ Lane Grp	Lane Group Capacity	Adj Sat Flow Rate (s)	Ratios v/c	Ratios g/C	Lane Group Delay	Lane Group LOS	Approach Delay	Approach LOS
Eastbound								
L	242	1805	0.36	0.62	19.2	B		
T	2241	3618	0.32	0.62	9.6	A	10.6	B
R	1000	1615	0.01	0.62	7.7	A		
Westbound								
L	352	723	0.01	0.49	14.0	B		
TR	1707	3503	0.89	0.49	30.6	C	30.6	C
Northbound								
L	404	1426	0.02	0.28	27.4	C		
TR	538	1900	0.01	0.28	27.3	C	27.4	C
Southbound								
L	407	1435	0.91	0.28	60.1	E		
T	538	1900	0.02	0.28	27.4	C	49.5	D
R	458	1615	0.46	0.28	32.0	C		

Intersection Delay = 28.8 (sec/veh) Intersection LOS = C

HCS+: Signalized Intersections Release 5.2

Analyst:
Agency: Gresham Smith and Partners
Date: 1/23/2006
Period: P.M
Project ID: Estimated
E/W St: Shelbyville Rd

Inter.: Shelbyville Rd/ Dorsey Ln
Area Type: All other areas
Jurisd:
Year : 2005

N/S St: Dorsey Ln

SIGNALIZED INTERSECTION SUMMARY

	Eastbound			Westbound			Northbound			Southbound		
	L	T	R	L	T	R	L	T	R	L	T	R
No. Lanes	1	2	1	1	2	0	1	1	0	1	1	1
LGConfig	L	T	R	L	TR		L	TR		L	T	R
Volume	301	1269	29	14	986	400	45	19	14	358	14	143
Lane Width	12.0	12.0	12.0	12.0	12.0		12.0	12.0		12.0	12.0	12.0
RTOR Vol			6			22			11			116

Duration 0.25 Area Type: All other areas

Signal Operations

Phase Combination	1	2	3	4		5	6	7	8
EB Left	A	A			NB Left	A			
Thru	A	A			Thru	A			
Right	A	A			Right	A			
Peds	X	X			Peds	X			
WB Left		A			SB Left	A			
Thru		A			Thru	A			
Right		A			Right	A			
Peds		X			Peds	X			
NB Right					EB Right				
SB Right					WB Right				
Green	30.0	65.6			30.0				
Yellow	4.0	4.3			4.0				
All Red	0.0	1.0			1.0				

Cycle Length: 139.9 secs

Intersection Performance Summary

Appr/ Lane Grp	Lane Group Capacity	Adj Sat Flow Rate (s)	Ratios v/c	Ratios g/C	Lane Group Delay	Lane Group LOS	Approach Delay	Approach LOS
Eastbound								
L	441	1805	0.76	0.71	49.3	D		
T	2576	3618	0.55	0.71	9.8	A	17.2	B
R	1150	1615	0.02	0.71	5.9	A		
Westbound								
L	170	362	0.09	0.47	20.9	C		
TR	1626	3467	0.93	0.47	45.3	D	45.0	D
Northbound								
L	304	1419	0.16	0.21	45.0	D		
TR	400	1864	0.06	0.21	43.8	D	44.6	D
Southbound								
L	302	1409	1.32	0.21	219.5	F		
T	407	1900	0.04	0.21	43.6	D	201.3	F
R	346	1615	0.09	0.21	44.1	D		

Intersection Delay = 50.3 (sec/veh) Intersection LOS = D

HCS+: Signalized Intersections Release 5.2

Analyst: Anthony Lewis
Agency: Gresham Smith and Partners
Date: 1/24/2006
Period: A.M
Project ID: GRW Optimized
E/W St: Shelbyville Rd

Inter.: Shelbyville Rd./ Hurstbourne
Area Type: All other areas
Jurisd:
Year : 2005
N/S St: Hurstbourne Pkwy

SIGNALIZED INTERSECTION SUMMARY

	Eastbound			Westbound			Northbound			Southbound		
	L	T	R	L	T	R	L	T	R	L	T	R
No. Lanes	1	2	1	2	2	0	2	2	1	1	2	1
LGConfig	L	T	R	L	TR		L	T	R	L	T	R
Volume	369	717	123	338	1065	143	225	932	154	174	666	502
Lane Width	12.0	12.0	12.0	12.0	12.0		12.0	12.0	12.0	12.0	12.0	12.0
RTOR Vol			49			4			107			233

Duration 0.25 Area Type: All other areas

Signal Operations

Phase Combination	1	2	3	4	5	6	7	8
EB Left	A				NB Left A			
Thru		A			Thru	A		
Right		A			Right	A		
Peds		X			Peds	X		
WB Left	A				SB Left A			
Thru		A			Thru	A		
Right		A			Right	A		
Peds		X			Peds	X		
NB Right					EB Right			
SB Right					WB Right			
Green	28.8	61.5			15.3	48.9		
Yellow	5.0	4.0			4.5	5.0		
All Red	2.0	1.5			1.5	2.0		

Cycle Length: 180.0 secs

Intersection Performance Summary

Appr/ Lane Grp	Lane Group Capacity	Adj Sat Flow Rate (s)	Ratios v/c	Ratios g/C	Lane Group Delay	Lane Group LOS	Approach Delay	Approach LOS
Eastbound								
L	289	1805	1.42	0.16	283.2	F		
T	1236	3618	0.64	0.34	51.2	D	124.3	F
R	552	1615	0.15	0.34	41.2	D		
Westbound								
L	561	3505	0.67	0.16	74.2	E		
TR	1215	3555	1.10	0.34	117.1	F	107.7	F
Northbound								
L	298	3505	0.84	0.08	99.9	F		
T	983	3618	1.05	0.27	109.5	F	105.4	F
R	439	1615	0.12	0.27	49.5	D		
Southbound								
L	153	1805	1.26	0.08	241.9	F		
T	983	3618	0.75	0.27	63.3	E	91.2	F
R	439	1615	0.68	0.27	62.9	E		

Intersection Delay = 107.3 (sec/veh) Intersection LOS = F

HCS+: Signalized Intersections Release 5.2

Analyst: Anthony Lewis
Agency: Gresham Smith and Partners
Date: 1/24/2006
Period: P.M
Project ID: GRW Optimized
E/W St: Shelbyville Rd

Inter.: Shelbyville Rd./ Hurstbourne
Area Type: All other areas
Jurisd:
Year : 2005
N/S St: Hurstbourne Pkwy

SIGNALIZED INTERSECTION SUMMARY

	Eastbound			Westbound			Northbound			Southbound		
	L	T	R	L	T	R	L	T	R	L	T	R
No. Lanes	1	2	1	2	2	0	2	2	1	1	2	1
LGConfig	L	T	R	L	TR		L	T	R	L	T	R
Volume	389	1096	205	451	963	154	440	1311	399	338	860	461
Lane Width	12.0	12.0	12.0	12.0	12.0		12.0	12.0	12.0	12.0	12.0	12.0
RTOR Vol			53			5			197			243

Duration 0.25 Area Type: All other areas

Signal Operations

Phase Combination	1	2	3	4	5	6	7	8
EB Left	A				NB Left A			
Thru		A			Thru	A		
Right		A			Right	A		
Peds		X			Peds	X		
WB Left	A				SB Left A			
Thru		A			Thru	A		
Right		A			Right	A		
Peds		X			Peds	X		
NB Right					EB Right			
SB Right					WB Right			
Green	23.8	55.1			23.2	51.9		
Yellow	5.0	4.5			4.5	5.0		
All Red	2.0	1.5			1.5	2.0		

Cycle Length: 180.0 secs

Intersection Performance Summary

Appr/ Lane Grp	Lane Group Capacity	Adj Sat Flow Rate (s)	Ratios v/c	Ratios g/C	Lane Group Delay	Lane Group LOS	Approach Delay	Approach LOS
Eastbound								
L	239	1805	1.81	0.13	457.6	F		
T	1108	3618	1.10	0.31	120.9	F	194.2	F
R	494	1615	0.34	0.31	48.8	D		
Westbound								
L	463	3505	1.08	0.13	143.8	F		
TR	1085	3545	1.14	0.31	136.6	F	138.7	F
Northbound								
L	452	3505	1.08	0.13	144.5	F		
T	1043	3618	1.40	0.29	248.5	F	205.0	F
R	466	1615	0.48	0.29	53.7	D		
Southbound								
L	233	1805	1.61	0.13	373.6	F		
T	1043	3618	0.92	0.29	74.4	E	142.8	F
R	466	1615	0.52	0.29	54.6	D		

Intersection Delay = 173.1 (sec/veh) Intersection LOS = F

HCS+: Signalized Intersections Release 5.2

Analyst:
Agency: Gresham Smith and Partners
Date: 1/23/2006
Period: A.M
Project ID: Optimized
E/W St: Shelbyville Rd

Inter.: Shelbyville Rd/ Lyndon Ln
Area Type: All other areas
Jurisd:
Year : 2005

N/S St: Lyndon Ln

SIGNALIZED INTERSECTION SUMMARY

	Eastbound			Westbound			Northbound			Southbound		
	L	T	R	L	T	R	L	T	R	L	T	R
No. Lanes	1	2	0	1	2	1	1	1	0	0	1	0
LGConfig	L	TR		L	T	R	L	TR			LTR	
Volume	45	1645	51	19	1542	68	208	48	30	207	74	46
Lane Width	12.0	12.0		12.0	12.0	12.0	12.0	12.0			12.0	
RTOR Vol			2			10			20			5

Duration 0.25 Area Type: All other areas

Signal Operations

Phase Combination	1	2	3	4	5	6	7	8
EB Left	A				NB Left	A		
Thru		A			Thru	A		
Right		A			Right	A		
Peds		X			Peds	X		
WB Left	A				SB Left	A		
Thru		A			Thru	A		
Right		A			Right	A		
Peds					Peds	X		
NB Right					EB Right			
SB Right					WB Right			
Green	5.0	65.1			24.9			
Yellow	4.0	4.0			4.0			
All Red	1.0	1.0			1.0			

Cycle Length: 110.0 secs

Intersection Performance Summary

Appr/ Lane Grp	Lane Group Capacity	Adj Sat Flow Rate (s)	Ratios v/c	Ratios g/C	Lane Group Delay	Lane Group LOS	Approach Delay	Approach LOS
Eastbound								
L	82	1805	0.61	0.05	64.1	E		
TR	2132	3602	0.88	0.59	24.0	C	25.0	C
Westbound								
L	82	1805	0.26	0.05	52.4	D		
T	2141	3618	0.80	0.59	19.7	B	19.7	B
R	956	1615	0.07	0.59	9.6	A		
Northbound								
L	266	1173	0.87	0.23	65.9	E		
TR	419	1851	0.15	0.23	34.3	C	59.1	E
Southbound								
LTR	308	1359	1.16	0.23	145.3	F	145.3	F

Intersection Delay = 34.9 (sec/veh) Intersection LOS = C

HCS+: Signalized Intersections Release 5.2

Analyst:
Agency: Gresham Smith and Partners
Date: 1/23/2006
Period: P.M
Project ID: Optimized
E/W St: Shelbyville Rd

Inter.: Shelbyville Rd/ Lyndon Ln
Area Type: All other areas
Jurisd:
Year : 2005

N/S St: Lyndon Ln

SIGNALIZED INTERSECTION SUMMARY

	Eastbound			Westbound			Northbound			Southbound		
	L	T	R	L	T	R	L	T	R	L	T	R
No. Lanes	1	2	0	1	2	1	1	1	0	0	1	0
LGConfig	L	TR		L	T	R	L	TR			LTR	
Volume	78	1487	66	9	1574	207	101	56	12	181	61	31
Lane Width	12.0	12.0		12.0	12.0	12.0	12.0	12.0			12.0	
RTOR Vol			2			24			6			2

Duration 0.25 Area Type: All other areas

Signal Operations

Phase Combination	1	2	3	4	5	6	7	8
EB Left	A				NB Left	A		
Thru		A			Thru	A		
Right		A			Right	A		
Peds		X			Peds	X		
WB Left	A				SB Left	A		
Thru		A			Thru	A		
Right		A			Right	A		
Peds					Peds	X		
NB Right					EB Right			
SB Right					WB Right			
Green	7.6	85.7			31.7			
Yellow	4.0	4.0			4.0			
All Red	1.0	1.0			1.0			

Cycle Length: 140.0 secs

Intersection Performance Summary

Appr/ Lane Grp	Lane Group Capacity	Adj Sat Flow Rate (s)	Ratios v/c	Ratios g/C	Lane Group Delay	Lane Group LOS	Approach Delay	Approach LOS
Eastbound								
L	98	1805	0.89	0.05	122.3	F		
TR	2201	3595	0.78	0.61	22.1	C	26.9	C
Westbound								
L	98	1805	0.10	0.05	63.4	E		
T	2215	3618	0.79	0.61	22.4	C	21.5	C
R	989	1615	0.21	0.61	12.1	B		
Northbound								
L	272	1202	0.41	0.23	47.2	D		
TR	424	1871	0.16	0.23	43.7	D	45.9	D
Southbound								
LTR	291	1284	1.03	0.23	116.1	F	116.1	F

Intersection Delay = 31.6 (sec/veh) Intersection LOS = C

HCS+: Signalized Intersections Release 5.2

Analyst:
Agency: Gresham Smith and Partners
Date: 1/23/2006
Period: A.M
Project ID: Estimated
E/W St: Shelbyville Rd

Inter.: Shelbyville / Whittington Pkwy
Area Type: All other areas
Jurisd:
Year : 2005

N/S St: Whittington Pkwy

SIGNALIZED INTERSECTION SUMMARY

	Eastbound			Westbound			Northbound			Southbound		
	L	T	R	L	T	R	L	T	R	L	T	R
No. Lanes	0	2	1	1	2	0	1	0	1	0	0	0
LGConfig		T	R	L	T		L		R			
Volume		1281	508	126	1470		60		31			
Lane Width		12.0	12.0	12.0	12.0		12.0		12.0			
RTOR Vol			150						27			

Duration 0.25 Area Type: All other areas

Signal Operations

Phase Combination	1	2	3	4	5	6	7	8
EB Left					NB Left A			
Thru		A			Thru			
Right		A			Right A			
Peds					Peds X			
WB Left	A				SB Left			
Thru	A	A			Thru			
Right					Right			
Peds					Peds			
NB Right					EB Right			
SB Right					WB Right			
Green	10.4	50.0			9.6			
Yellow	4.0	4.5			5.0			
All Red	1.0	1.0			1.0			

Cycle Length: 86.5 secs

Intersection Performance Summary

Appr/ Lane Grp	Lane Group Capacity	Adj Sat Flow Rate (s)	Ratios v/c	Ratios g/C	Lane Group Delay	Lane Group LOS	Approach Delay	Approach LOS
Eastbound								
T	2091	3618	0.68	0.58	12.8	B	12.2	B
R	934	1615	0.43	0.58	10.2	B		
Westbound								
L	217	1805	0.65	0.12	42.8	D		
T	2735	3618	0.60	0.76	5.1	A	8.0	A
Northbound								
L	200	1805	0.34	0.11	35.6	D		
							35.5	D
R	179	1615	0.02	0.11	34.3	C		
Southbound								

Intersection Delay = 10.6 (sec/veh) Intersection LOS = B

HCS+: Signalized Intersections Release 5.2

Analyst:
Agency: Gresham Smith and Partners
Date: 1/23/2006
Period: P.M
Project ID: Estimated
E/W St: Shelbyville Rd

Inter.: Shelbyville / Whittington Pkwy
Area Type: All other areas
Jurisd:
Year : 2005

N/S St: Whittington Pkwy

SIGNALIZED INTERSECTION SUMMARY

	Eastbound			Westbound			Northbound			Southbound		
	L	T	R	L	T	R	L	T	R	L	T	R
No. Lanes	0	2	1	1	2	0	1	0	1	0	0	0
LGConfig		T	R	L	T		L		R			
Volume		1176	253	68	1514		441		164			
Lane Width		12.0	12.0	12.0	12.0		12.0		12.0			
RTOR Vol			128						108			

Duration 0.25 Area Type: All other areas

Signal Operations

Phase Combination	1	2	3	4	5	6	7	8
EB Left					NB Left A			
Thru		A			Thru			
Right		A			Right A			
Peds					Peds X			
WB Left	A				SB Left			
Thru	A	A			Thru			
Right					Right			
Peds					Peds			
NB Right					EB Right			
SB Right					WB Right			
Green	20.7	50.0			40.0			
Yellow	4.0	4.5			5.0			
All Red	1.0	1.0			1.0			

Cycle Length: 127.2 secs

Intersection Performance Summary

Appr/ Lane Grp	Lane Group Capacity	Adj Sat Flow Rate (s)	Ratios v/c	Ratios g/C	Lane Group Delay	Lane Group LOS	Approach Delay	Approach LOS
Eastbound								
T	1422	3618	0.92	0.39	37.8	D	36.6	D
R	635	1615	0.22	0.39	25.6	C		
Westbound								
L	294	1805	0.26	0.16	47.0	D		
T	2153	3618	0.78	0.60	21.4	C	22.5	C
Northbound								
L	568	1805	0.86	0.31	42.4	D		
							41.1	D
R	508	1615	0.12	0.31	31.1	C		
Southbound								

Intersection Delay = 30.7 (sec/veh) Intersection LOS = C

HCS+: Signalized Intersections Release 5.2

Analyst:
Agency: Gresham Smith and Partners
Date: 1/24/2006
Period: A.M
Project ID: Optimized
E/W St: Taylorsville Rd

Inter.: Taylorsville Rd./ Hurstbourne
Area Type: All other areas
Jurisd:
Year : 2005
N/S St: Hurstbourne Pkwy

SIGNALIZED INTERSECTION SUMMARY

	Eastbound			Westbound			Northbound			Southbound		
	L	T	R	L	T	R	L	T	R	L	T	R
No. Lanes	2	2	1	1	2	1	2	2	1	2	2	1
LGConfig	L	T	R	L	T	R	L	T	R	L	T	R
Volume	487	419	19	60	842	972	157	1372	23	333	496	349
Lane Width	12.0	12.0	12.0	12.0	12.0	12.0	12.0	12.0	12.0	12.0	12.0	12.0
RTOR Vol			15			211			3			257

Duration 0.25 Area Type: All other areas

Signal Operations

Phase Combination	1	2	3	4		5	6	7	8
EB Left	A				NB Left	A			
Thru		A			Thru		A		
Right		A			Right		A		
Peds		X			Peds		X		
WB Left	A				SB Left	A			
Thru		A			Thru		A		
Right		A			Right		A		
Peds					Peds				
NB Right					EB Right				
SB Right					WB Right				
Green	21.8	54.9				14.9	62.4		
Yellow	4.5	5.0				4.5	5.0		
All Red	1.5	2.0				1.5	2.0		

Cycle Length: 180.0 secs

Intersection Performance Summary

Appr/ Lane Grp	Lane Group Capacity	Adj Sat Flow Rate (s)	Ratios v/c	Ratios g/C	Lane Group Delay	Lane Group LOS	Approach Delay	Approach LOS
Eastbound								
L	424	3505	1.28	0.12	220.5	F		
T	1103	3618	0.42	0.31	50.2	D	141.3	F
R	493	1615	0.01	0.31	43.6	D		
Westbound								
L	219	1805	0.31	0.12	73.0	E		
T	1103	3618	0.85	0.31	65.0	E	215.5	F
R	493	1615	1.72	0.31	393.3	F		
Northbound								
L	290	3505	0.60	0.08	83.1	F		
T	1254	3618	1.22	0.35	163.2	F	153.5	F
R	560	1615	0.04	0.35	39.0	D		
Southbound								
L	290	3505	1.28	0.08	230.7	F		
T	1254	3618	0.44	0.35	45.6	D	112.1	F
R	560	1615	0.18	0.35	41.2	D		

Intersection Delay = 164.2 (sec/veh) Intersection LOS = F

HCS+: Signalized Intersections Release 5.2

Analyst:
Agency: Gresham Smith and Partners
Date: 1/24/2006
Period: P.M
Project ID: Optimized
E/W St: Taylorsville Rd

Inter.: Taylorsville Rd/Hurstbourne Pk
Area Type: All other areas
Jurisd:
Year : 2005
N/S St: Hurstbourne Pkwy

SIGNALIZED INTERSECTION SUMMARY

	Eastbound			Westbound			Northbound			Southbound		
	L	T	R	L	T	R	L	T	R	L	T	R
No. Lanes	2	2	1	1	2	1	2	2	1	2	2	1
LGConfig	L	T	R	L	T	R	L	T	R	L	T	R
Volume	504	833	81	183	631	579	146	847	136	925	1395	859
Lane Width	12.0	12.0	12.0	12.0	12.0	12.0	12.0	12.0	12.0	12.0	12.0	12.0
RTOR Vol			47			367			35			312

Duration 0.25 Area Type: All other areas

Signal Operations

Phase Combination	1	2	3	4		5	6	7	8
EB Left	A				NB Left	A			
Thru		A			Thru		A		
Right		A			Right		A		
Peds		X			Peds		X		
WB Left	A				SB Left	A			
Thru		A			Thru		A		
Right		A			Right		A		
Peds					Peds				
NB Right					EB Right				
SB Right					WB Right				
Green	16.6	37.2				50.7	49.5		
Yellow	4.5	5.0				4.5	5.0		
All Red	1.5	2.0				1.5	2.0		

Cycle Length: 180.0 secs

Intersection Performance Summary

Appr/ Lane Grp	Lane Group Capacity	Adj Sat Flow Rate (s)	Ratios v/c	Ratios g/C	Lane Group Delay	Lane Group LOS	Approach Delay	Approach LOS
Eastbound								
L	323	3505	1.73	0.09	424.6	F		
T	748	3618	1.24	0.21	189.8	F	272.8	F
R	334	1615	0.11	0.21	58.2	E		
Westbound								
L	166	1805	1.22	0.09	223.9	F		
T	748	3618	0.94	0.21	89.5	F	110.0	F
R	334	1615	0.71	0.21	73.0	E		
Northbound								
L	987	3505	0.16	0.28	48.8	D		
T	995	3618	0.95	0.28	80.9	F	73.9	E
R	444	1615	0.25	0.28	51.1	D		
Southbound								
L	987	3505	1.04	0.28	104.7	F		
T	995	3618	1.56	0.28	321.2	F	236.9	F
R	444	1615	1.37	0.28	245.3	F		

Intersection Delay = 196.1 (sec/veh) Intersection LOS = F

HCS+: Signalized Intersections Release 5.2

Analyst:
Agency: Gresham Smith and Partners
Date: 1/24/2006
Period: A.M
Project ID: Estimated
E/W St: Westport Rd

Inter.: Westport Rd./ Hurstbourne
Area Type: All other areas
Jurisd:
Year : 2005
N/S St: Hurstbourne Pkwy

SIGNALIZED INTERSECTION SUMMARY

	Eastbound			Westbound			Northbound			Southbound		
	L	T	R	L	T	R	L	T	R	L	T	R
No. Lanes	2	2	1	2	2	1	1	2	1	2	2	1
LGConfig	L	T	R	L	T	R	L	T	R	L	T	R
Volume	102	357	294	633	553	151	141	297	266	101	717	146
Lane Width	12.0	12.0	12.0	12.0	12.0	12.0	12.0	12.0	12.0	12.0	12.0	12.0
RTOR Vol			139			113			182			74

Duration 0.25 Area Type: All other areas

Signal Operations

Phase Combination	1	2	3	4	5	6	7	8
EB Left	A				A	A		
Thru			A			A	A	
Right			A			A	A	
Peds			X			X	X	
WB Left	A	A			A			
Thru		A	A				A	
Right		A	A				A	
Peds		X	X				X	
NB Right								
SB Right								
Green	8.4	6.6	18.5		8.3	1.0	30.0	
Yellow	4.0	4.3	4.3		4.5	4.5	4.5	
All Red	1.0	1.0	2.0		1.0	2.0	1.0	

Cycle Length: 106.9 secs

Intersection Performance Summary

Appr/ Lane Grp	Lane Group Capacity	Adj Sat Flow Rate (s)	Ratios v/c	Ratios g/C	Lane Group Delay	Lane Group LOS	Approach Delay	Approach LOS
Eastbound								
L	275	3505	0.41	0.08	47.9	D		
T	626	3618	0.63	0.17	43.2	D	44.4	D
R	279	1615	0.62	0.17	45.0	D		
Westbound								
L	656	3505	1.07	0.19	99.4	F		
T	1029	3618	0.60	0.28	33.9	C	67.6	E
R	459	1615	0.09	0.28	28.2	C		
Northbound								
L	250	1805	0.63	0.14	48.4	D		
T	1269	3618	0.26	0.35	24.9	C	31.1	C
R	567	1615	0.16	0.35	24.0	C		
Southbound								
L	272	3505	0.41	0.08	48.0	D		
T	1015	3618	0.79	0.28	39.6	D	39.7	D
R	453	1615	0.18	0.28	29.3	C		

Intersection Delay = 49.7 (sec/veh) Intersection LOS = D

HCS+: Signalized Intersections Release 5.2

Analyst:
Agency: Gresham Smith and Partners
Date: 1/24/2006
Period: P.M
Project ID: Estimated
E/W St: Westport Rd

Inter.: Westport Rd./ Hurstbourne
Area Type: All other areas
Jurisd:
Year : 2005
N/S St: Hurstbourne Pkwy

SIGNALIZED INTERSECTION SUMMARY

	Eastbound			Westbound			Northbound			Southbound		
	L	T	R	L	T	R	L	T	R	L	T	R
No. Lanes	2	2	1	2	2	1	1	2	1	2	2	1
LGConfig	L	T	R	L	T	R	L	T	R	L	T	R
Volume	170	645	262	443	600	173	305	875	867	179	546	153
Lane Width	12.0	12.0	12.0	12.0	12.0	12.0	12.0	12.0	12.0	12.0	12.0	12.0
RTOR Vol			81			129			290			102

Duration 0.25 Area Type: All other areas

Signal Operations

Phase Combination	1	2	3	4	5	6	7	8
EB Left	A				A	A		
Thru			A			A	A	
Right			A			A	A	
Peds			X			X	X	
WB Left	A	A			A			
Thru		A	A				A	
Right		A	A				A	
Peds		X	X				X	
NB Right								
SB Right								
Green	11.1	4.3	32.5		10.9	7.3	36.2	
Yellow	4.0	4.3	4.3		4.0	4.5	4.5	
All Red	1.0	1.0	2.0		1.0	2.0	2.0	

Cycle Length: 136.9 secs

Intersection Performance Summary

Appr/ Lane Grp	Lane Group Capacity	Adj Sat Flow Rate (s)	Ratios v/c	Ratios g/C	Lane Group Delay	Lane Group LOS	Approach Delay	Approach LOS
Eastbound								
L	284	3505	0.67	0.08	66.9	E		
T	859	3618	0.83	0.24	56.8	E	56.7	E
R	383	1615	0.52	0.24	46.8	D		
Westbound								
L	522	3505	0.94	0.15	83.5	F		
T	1113	3618	0.60	0.31	41.1	D	58.1	E
R	497	1615	0.10	0.31	33.9	C		
Northbound								
L	306	1805	1.11	0.17	140.5	F		
T	1321	3618	0.74	0.37	39.9	D	79.1	E
R	590	1615	1.09	0.37	106.1	F		
Southbound								
L	279	3505	0.71	0.08	69.8	E		
T	957	3618	0.63	0.26	45.9	D	50.9	D
R	427	1615	0.13	0.26	38.5	D		

Intersection Delay = 64.6 (sec/veh) Intersection LOS = E

HCS+: Signalized Intersections Release 5.2

Analyst:
Agency: Gresham Smith and Partners
Date: 1/23/2006
Period: A.M
Project ID: Optimized
E/W St: Whittington Pkwy

Inter.: Whittington Pkwy / Hurstbourne
Area Type: All other areas
Jurisd:
Year : 2005

N/S St: Hurstbourne Pkwy

SIGNALIZED INTERSECTION SUMMARY

	Eastbound			Westbound			Northbound			Southbound		
	L	T	R	L	T	R	L	T	R	L	T	R
No. Lanes	0	1	1	0	1	1	1	3	0	1	2	1
LGConfig		LT	R		LT	R	L	TR		L	T	R
Volume	46	15	184	31	15	26	266	1239	15	5	886	236
Lane Width		12.0	12.0		12.0	12.0	12.0	12.0		12.0	12.0	12.0
RTOR Vol			175			25			1			83

Duration 0.25 Area Type: All other areas

Signal Operations

Phase Combination	1	2	3	4		5	6	7	8
EB Left	A				NB Left	A	A		
Thru	A				Thru		A	A	
Right	A				Right		A	A	
Peds	X				Peds				
WB Left	A				SB Left	A			
Thru	A				Thru			A	
Right	A				Right			A	
Peds					Peds				
NB Right					EB Right				
SB Right					WB Right				
Green	9.2					40.1	4.2	102.5	
Yellow	4.5					4.5	4.5	4.5	
All Red	1.5					1.5	1.5	1.5	

Cycle Length: 180.0 secs

Intersection Performance Summary

Appr/ Lane Grp	Lane Group Capacity	Adj Sat Flow Rate (s)	Ratios v/c	Ratios g/C	Lane Group Delay	Lane Group LOS	Approach Delay	Approach LOS
Eastbound								
LT	73	1419	0.93	0.05	167.0	F	156.1	F
R	83	1615	0.12	0.05	82.2	F		
Westbound								
LT	68	1330	0.75	0.05	120.8	F	120.1	F
R	83	1615	0.01	0.05	81.1	F		
Northbound								
L	504	1805	0.59	0.28	57.7	E		
TR	3235	5167	0.43	0.63	17.3	B	24.4	C
Southbound								
L	402	1805	0.01	0.22	54.6	D		
T	2060	3618	0.48	0.57	23.1	C	22.6	C
R	920	1615	0.18	0.57	18.7	B		

Intersection Delay = 28.8 (sec/veh) Intersection LOS = C

HCS+: Signalized Intersections Release 5.2

Analyst:
Agency: Gresham Smith and Partners
Date: 1/23/2006
Period: P.M
Project ID: Optimized
E/W St: Whittington Pkwy

Inter.: Whittington Pkwy / Hurstbourne
Area Type: All other areas
Jurisd:
Year : 2005

N/S St: Hurstbourne Pkwy

SIGNALIZED INTERSECTION SUMMARY

	Eastbound			Westbound			Northbound			Southbound		
	L	T	R	L	T	R	L	T	R	L	T	R
No. Lanes	0	1	1	0	1	1	1	3	0	1	2	1
LGConfig		LT	R		LT	R	L	TR		L	T	R
Volume	302	20	461	46	26	20	179	1828	31	15	1367	133
Lane Width		12.0	12.0		12.0	12.0	12.0	12.0		12.0	12.0	12.0
RTOR Vol			150			13			1			39

Duration 0.25 Area Type: All other areas

Signal Operations

Phase Combination	1	2	3	4		5	6	7	8
EB Left	A				NB Left	A	A		
Thru	A				Thru		A	A	
Right	A				Right		A	A	
Peds	X				Peds				
WB Left	A				SB Left	A			
Thru	A				Thru			A	
Right	A				Right			A	
Peds					Peds				
NB Right					EB Right				
SB Right					WB Right				
Green	62.9					4.3	11.7	77.1	
Yellow	4.5					4.5	4.5	4.5	
All Red	1.5					1.5	1.5	1.5	

Cycle Length: 180.0 secs

Intersection Performance Summary

Appr/ Lane Grp	Lane Group Capacity	Adj Sat Flow Rate (s)	Ratios v/c	Ratios g/C	Lane Group Delay	Lane Group LOS	Approach Delay	Approach LOS
Eastbound								
LT	453	1295	0.79	0.35	61.8	E	56.2	E
R	564	1615	0.61	0.35	50.5	D		
Westbound								
LT	312	893	0.26	0.35	42.3	D	41.9	D
R	564	1615	0.01	0.35	38.3	D		
Northbound								
L	221	1805	0.90	0.12	112.9	F		
TR	2719	5163	0.76	0.53	34.9	C	41.7	D
Southbound								
L	43	1805	0.40	0.02	92.5	F		
T	1550	3618	0.98	0.43	68.9	E	66.8	E
R	692	1615	0.15	0.43	31.5	C		

Intersection Delay = 52.7 (sec/veh) Intersection LOS = D

HCS+: Unsignalized Intersections Release 5.2

TWO-WAY STOP CONTROL SUMMARY

Analyst:
Agency/Co.: Gresham Smith and Partners
Date Performed: 1/27/2006
Analysis Time Period: A.M
Intersection: Shelbyville/ Whipps Mill Rd
Jurisdiction:
Units: U. S. Customary
Analysis Year: 2005
Project ID:
East/West Street: Shelbyville Rd.
North/South Street: Whipps Mill Rd
Intersection Orientation: EW Study period (hrs): 0.25

Vehicle Volumes and Adjustments

Major Street: Approach	Eastbound			Westbound		
Movement	1	2	3	4	5	6
	L	T	R	L	T	R
Volume	413	1891	10	2	1733	5
Peak-Hour Factor, PHF	1.00	1.00	1.00	1.00	1.00	1.00
Hourly Flow Rate, HFR	413	1891	10	2	1733	5
Percent Heavy Vehicles	0	--	--	0	--	--
Median Type/Storage	TWLTL			/ 1		
RT Channelized?						No
Lanes	1	2	0	1	2	1
Configuration	L	T	TR	L	T	R
Upstream Signal?		Yes			Yes	

Minor Street: Approach	Northbound			Southbound		
Movement	7	8	9	10	11	12
	L	T	R	L	T	R
Volume	0	0	1	1	0	387
Peak Hour Factor, PHF	1.00	1.00	1.00	1.00	1.00	1.00
Hourly Flow Rate, HFR	0	0	1	1	0	387
Percent Heavy Vehicles	0	0	0	0	0	0
Percent Grade (%)		0			0	
Flared Approach: Exists?/Storage			No /			/
Lanes	0	1	0	0	1	1
Configuration		LTR		LT	R	

Delay, Queue Length, and Level of Service

Approach	EB	WB	Northbound			Southbound		
Movement	1	4	7	8	9	10	11	12
Lane Config	L	L		LTR		LT		R
v (vph)	413	2		1		1		387
C(m) (vph)	657	518		0				474
v/c	0.63	0.00						0.82
95% queue length	4.43	0.01						7.78
Control Delay	19.3	12.0						38.3
LOS	C	B		F				E
Approach Delay								
Approach LOS								

HCS+: Unsignalized Intersections Release 5.2

TWO-WAY STOP CONTROL SUMMARY

Analyst:
Agency/Co.: Gresham Smith and Partners
Date Performed: 1/27/2006
Analysis Time Period: P.M
Intersection: Shelbyville/ Whipps Mill Rd
Jurisdiction:
Units: U. S. Customary
Analysis Year: 2005
Project ID:
East/West Street: Shelbyville Rd.
North/South Street: Whipps Mill Rd
Intersection Orientation: EW Study period (hrs): 0.25

Vehicle Volumes and Adjustments

Major Street: Approach	Eastbound			Westbound		
Movement	1	2	3	4	5	6
	L	T	R	L	T	R
Volume	284	1575	22	0	1814	15
Peak-Hour Factor, PHF	1.00	1.00	1.00	1.00	1.00	1.00
Hourly Flow Rate, HFR	284	1575	22	0	1814	15
Percent Heavy Vehicles	0	--	--	0	--	--
Median Type/Storage	TWLTL			/ 1		
RT Channelized?						No
Lanes	1	2	0	1	2	1
Configuration	L	T	TR	L	T	R
Upstream Signal?		Yes			Yes	

Minor Street: Approach	Northbound			Southbound		
Movement	7	8	9	10	11	12
	L	T	R	L	T	R
Volume	1	0	2	2	0	306
Peak Hour Factor, PHF	1.00	1.00	1.00	1.00	1.00	1.00
Hourly Flow Rate, HFR	1	0	2	2	0	306
Percent Heavy Vehicles	0	0	0	0	0	0
Percent Grade (%)		0			0	
Flared Approach: Exists?/Storage			No /			/
Lanes	0	1	0	0	1	1
Configuration		LTR		LT	R	

Delay, Queue Length, and Level of Service

Approach	EB	WB	Northbound			Southbound		
Movement	1	4	7	8	9	10	11	12
Lane Config	L	L		LTR		LT		R
v (vph)	284	0		3		2		306
C(m) (vph)	580	591		0		112		456
v/c	0.49	0.00				0.02		0.67
95% queue length	2.68	0.00				0.05		4.86
Control Delay	17.0	11.1				37.7		27.5
LOS	C	B		F		E		D
Approach Delay							27.6	
Approach LOS							D	

HCS+: Unsignalized Intersections Release 5.2

TWO-WAY STOP CONTROL SUMMARY

Analyst:
Agency/Co.: Gresham Smith and Partners
Date Performed: 1/24/2006
Analysis Time Period: A.M.
Intersection: Shelbyville Rd/ Blue Ridge Ma
Jurisdiction:
Units: U. S. Customary
Analysis Year: 2005
Project ID:
East/West Street: Shelbyville Rd
North/South Street: Blue Ridge Manor
Intersection Orientation: EW Study period (hrs): 0.25

Vehicle Volumes and Adjustments

Major Street: Approach	Eastbound			Westbound		
Movement	1	2	3	4	5	6
	L	T	R	L	T	R
Volume	0	756	8	7	1492	0
Peak-Hour Factor, PHF	1.00	1.00	1.00	1.00	1.00	1.00
Hourly Flow Rate, HFR	0	756	8	7	1492	0
Percent Heavy Vehicles	0	--	--	0	--	--
Median Type/Storage	TWLTL			/ 1		
RT Channelized?			No			
Lanes	1	2	1	1	2	0
Configuration	L	T	R	L	T	TR
Upstream Signal?		Yes			Yes	

Minor Street: Approach	Northbound			Southbound		
Movement	7	8	9	10	11	12
	L	T	R	L	T	R
Volume	17		17			
Peak Hour Factor, PHF	1.00		1.00			
Hourly Flow Rate, HFR	17		17			
Percent Heavy Vehicles	0		0			
Percent Grade (%)		0			0	
Flared Approach: Exists?/Storage			/			/
Lanes	1		1			
Configuration	L		R			

Delay, Queue Length, and Level of Service

Approach	EB	WB	Northbound			Southbound		
Movement	1	4	7	8	9	10	11	12
Lane Config	L	L	L		R			
v (vph)	0	7	17		17			
C(m) (vph)	524	1038	396		914			
v/c	0.00	0.01	0.04		0.02			
95% queue length	0.00	0.02	0.13		0.06			
Control Delay	11.9	8.5	14.5		9.0			
LOS	B	A	B		A			
Approach Delay				11.8				
Approach LOS				B				

HCS+: Unsignalized Intersections Release 5.2

TWO-WAY STOP CONTROL SUMMARY

Analyst:
Agency/Co.: Gresham Smith and Partners
Date Performed: 1/24/2006
Analysis Time Period: P.M.
Intersection: Shelbyville Rd/ Blue Ridge Ma
Jurisdiction:
Units: U. S. Customary
Analysis Year: 2005
Project ID:
East/West Street: Shelbyville Rd
North/South Street: Blue Ridge Manor
Intersection Orientation: EW Study period (hrs): 0.25

Vehicle Volumes and Adjustments

Major Street: Approach	Eastbound			Westbound		
Movement	1	2	3	4	5	6
	L	T	R	L	T	R
Volume	0	1623	23	27	1276	0
Peak-Hour Factor, PHF	1.00	1.00	1.00	1.00	1.00	1.00
Hourly Flow Rate, HFR	0	1623	23	27	1276	0
Percent Heavy Vehicles	0	--	--	0	--	--
Median Type/Storage	TWLTL			/ 1		
RT Channelized?			No			
Lanes	1	2	1	1	2	0
Configuration	L	T	R	L	T	TR
Upstream Signal?		Yes			Yes	

Minor Street: Approach	Northbound			Southbound		
Movement	7	8	9	10	11	12
	L	T	R	L	T	R
Volume	11		23			
Peak Hour Factor, PHF	1.00		1.00			
Hourly Flow Rate, HFR	11		23			
Percent Heavy Vehicles	0		0			
Percent Grade (%)		0			0	
Flared Approach: Exists?/Storage			/			/
Lanes	1		1			
Configuration	L		R			

Delay, Queue Length, and Level of Service

Approach	EB	WB	Northbound			Southbound		
Movement	1	4	7	8	9	10	11	12
Lane Config	L	L	L		R			
v (vph)	0	27	11		23			
C(m) (vph)	651	441	150		697			
v/c	0.00	0.06	0.07		0.03			
95% queue length	0.00	0.19	0.23		0.10			
Control Delay	10.5	13.7	30.9		10.3			
LOS	B	B	D		B			
Approach Delay				17.0				
Approach LOS				C				

HCS+: Unsignalized Intersections Release 5.2

TWO-WAY STOP CONTROL SUMMARY

Analyst:
Agency/Co.: Gresham Smith and Partners
Date Performed: 1/23/2006
Analysis Time Period: A.M
Intersection: Tamarisk Pkwy / Hurstbourne
Jurisdiction:
Units: U. S. Customary
Analysis Year: 2005
Project ID:
East/West Street: Tamarisk Pkwy
North/South Street: Hurstbourne Pkwy
Intersection Orientation: NS Study period (hrs): 0.25

Vehicle Volumes and Adjustments

Major Street: Approach	Northbound			Southbound		
Movement	1	2	3	4	5	6
	L	T	R	L	T	R
Volume	2	900	10	9	1310	3
Peak-Hour Factor, PHF	1.00	1.00	1.00	1.00	1.00	1.00
Hourly Flow Rate, HFR	2	900	10	9	1310	3
Percent Heavy Vehicles	0	--	--	0	--	--
Median Type/Storage	Raised curb / 1					
RT Channelized?			No			
Lanes	1	2	1	1	2	0
Configuration	L	T	R	L	T	TR
Upstream Signal?		Yes			Yes	

Minor Street: Approach	Westbound			Eastbound		
Movement	7	8	9	10	11	12
	L	T	R	L	T	R
Volume	70	0	46	1	0	0
Peak Hour Factor, PHF	1.00	1.00	1.00	1.00	1.00	1.00
Hourly Flow Rate, HFR	70	0	46	1	0	0
Percent Heavy Vehicles	0	0	0	0	0	0
Percent Grade (%)		0			0	
Flared Approach: Exists?/Storage			No /			Yes /1
Lanes	1	1	0	0	1	0
Configuration	L		TR		LTR	

Delay, Queue Length, and Level of Service

Approach	NB	SB	Westbound			Eastbound		
Movement	1	4	7	8	9	10	11	12
Lane Config	L	L	L		TR		LTR	
v (vph)	2	9	70		46		1	
C(m) (vph)	572	757	215		562			
v/c	0.00	0.01	0.33		0.08			
95% queue length	0.01	0.04	1.35		0.27			
Control Delay	11.3	9.8	29.6		12.0		29.2	
LOS	B	A	D		B			
Approach Delay				22.6			29.2	
Approach LOS				C			D	

HCS+: Unsignalized Intersections Release 5.2

TWO-WAY STOP CONTROL SUMMARY

Analyst:
Agency/Co.: Gresham Smith and Partners
Date Performed: 1/23/2006
Analysis Time Period: P.M
Intersection: Tamarisk Pkwy / Hurstbourne
Jurisdiction:
Units: U. S. Customary
Analysis Year: 2005
Project ID:
East/West Street: Tamarisk Pkwy
North/South Street: Hurstbourne Pkwy
Intersection Orientation: NS Study period (hrs): 0.25

Vehicle Volumes and Adjustments

Major Street: Approach	Northbound			Southbound		
Movement	1	2	3	4	5	6
	L	T	R	L	T	R
Volume	6	1180	58	56	984	0
Peak-Hour Factor, PHF	1.00	1.00	1.00	1.00	1.00	1.00
Hourly Flow Rate, HFR	6	1180	58	56	984	0
Percent Heavy Vehicles	0	--	--	0	--	--
Median Type/Storage	Raised curb / 1					
RT Channelized?			Yes			
Lanes	1	2	1	1	2	0
Configuration	L	T	R	L	T	TR
Upstream Signal?		Yes			Yes	

Minor Street: Approach	Westbound			Eastbound		
Movement	7	8	9	10	11	12
	L	T	R	L	T	R
Volume	27	0	42	4	0	14
Peak Hour Factor, PHF	1.00	1.00	1.00	1.00	1.00	1.00
Hourly Flow Rate, HFR	27	0	42	4	0	14
Percent Heavy Vehicles	0	0	0	0	0	0
Percent Grade (%)		0			0	
Flared Approach: Exists?/Storage			No /			Yes /1
Lanes	1	1	0	0	1	0
Configuration	L		TR		LTR	

Delay, Queue Length, and Level of Service

Approach	NB	SB	Westbound			Eastbound		
Movement	1	4	7	8	9	10	11	12
Lane Config	L	L	L		TR		LTR	
v (vph)	6	56	27		42		18	
C(m) (vph)	710	819	223		763		679	
v/c	0.01	0.07	0.12		0.06		0.03	
95% queue length	0.03	0.22	0.41		0.17		0.08	
Control Delay	10.1	9.7	23.4		10.0-		15.1	
LOS	B	A	C		A		C	
Approach Delay				15.2			15.1	
Approach LOS				C			C	

HCS+: Signalized Intersections Release 5.2

Analyst:
Agency: Gresham Smith and Partners
Date: 1/23/2006
Period: A.M
Project ID: Optimized
E/W St: Linn Station

Inter.: Linn Station/Hurstbourne Pkwy
Area Type: All other areas
Jurisd:
Year : 2009

N/S St: Hurstbourne Pkwy

SIGNALIZED INTERSECTION SUMMARY

	Eastbound			Westbound			Northbound			Southbound		
	L	T	R	L	T	R	L	T	R	L	T	R
No. Lanes	1	1	1	2	1	1	2	2	1	2	3	0
LGConfig	L	LT	R	L	T	R	L	T	R	L	TR	
Volume	80	120	510	700	60	80	490	1540	1060	160	1110	80
Lane Width	12.0	12.0	12.0	12.0	12.0	12.0	12.0	12.0	12.0	12.0	12.0	
RTOR Vol			305			67			410			52

Duration 0.25 Area Type: All other areas

Signal Operations

Phase Combination	1	2	3	4		5	6	7	8
EB Left	A				NB Left	A	A		
Thru	A				Thru		A	A	
Right	A				Right		A	A	
Peds	X				Peds		X	X	
WB Left		A			SB Left	A			
Thru		A			Thru			A	
Right		A			Right			A	
Peds		X			Peds			X	
NB Right					EB Right				
SB Right					WB Right				
Green	19.5	31.2				8.5	36.0	49.8	
Yellow	5.0	5.0				5.0	5.0	5.0	
All Red	2.0	2.0				2.0	2.0	2.0	

Cycle Length: 180.0 secs

Intersection Performance Summary

Appr/ Lane Grp	Lane Group Capacity	Adj Sat Flow Rate (s)	Ratios v/c	Ratios g/C	Lane Group Delay	Lane Group LOS	Approach Delay	Approach LOS
Eastbound								
L	196	1805	0.45	0.11	76.9	E		
LT	206	1900	0.65	0.11	83.8	F	167.5	F
R	175	1615	1.30	0.11	251.7	F		
Westbound								
L	608	3505	1.28	0.17	212.6	F		
T	329	1900	0.20	0.17	64.1	E	198.5	F
R	280	1615	0.05	0.17	62.1	E		
Northbound								
L	1003	3505	0.54	0.29	54.9	D		
T	1865	3618	0.92	0.52	47.8	D	49.1	D
R	833	1615	0.87	0.52	47.8	D		
Southbound								
L	166	3505	1.07	0.05	176.2	F		
TR	1427	5157	0.89	0.28	69.4	E	82.6	F

Intersection Delay = 89.2 (sec/veh) Intersection LOS = F

HCS+: Signalized Intersections Release 5.2

Analyst:
Agency: Gresham Smith and Partners
Date: 1/23/2006
Period: P.M
Project ID: Optimized
E/W St: Linn Station

Inter.: Linn Station/Hurstbourne Pkwy
Area Type: All other areas
Jurisd:
Year : 2009

N/S St: Hurstbourne Pkwy

SIGNALIZED INTERSECTION SUMMARY

	Eastbound			Westbound			Northbound			Southbound		
	L	T	R	L	T	R	L	T	R	L	T	R
No. Lanes	1	1	1	2	1	1	2	2	1	2	3	0
LGConfig	L	LT	R	L	T	R	L	T	R	L	TR	
Volume	80	180	590	1430	300	200	530	1740	1070	180	1650	60
Lane Width	12.0	12.0	12.0	12.0	12.0	12.0	12.0	12.0	12.0	12.0	12.0	
RTOR Vol			325			150			775			27

Duration 0.25 Area Type: All other areas

Signal Operations

Phase Combination	1	2	3	4		5	6	7	8
EB Left	A				NB Left	A	A		
Thru	A				Thru		A	A	
Right	A				Right		A	A	
Peds	X				Peds		X	X	
WB Left		A			SB Left	A			
Thru		A			Thru			A	
Right		A			Right			A	
Peds		X			Peds			X	
NB Right					EB Right				
SB Right					WB Right				
Green	18.5	46.5				7.9	11.0	61.1	
Yellow	5.0	5.0				5.0	5.0	5.0	
All Red	2.0	2.0				2.0	2.0	2.0	

Cycle Length: 180.0 secs

Intersection Performance Summary

Appr/ Lane Grp	Lane Group Capacity	Adj Sat Flow Rate (s)	Ratios v/c	Ratios g/C	Lane Group Delay	Lane Group LOS	Approach Delay	Approach LOS
Eastbound								
L	186	1805	0.48	0.10	78.1	E		
LT	195	1900	1.03	0.10	152.0	F	291.6	F
R	166	1615	1.77	0.10	451.1	F		
Westbound								
L	905	3505	1.76	0.26	411.4	F		
T	491	1900	0.68	0.26	63.8	E	342.7	F
R	417	1615	0.13	0.26	51.4	D		
Northbound								
L	504	3505	1.17	0.14	172.6	F		
T	1590	3618	1.22	0.44	153.5	F	143.9	F
R	710	1615	0.46	0.44	36.0	D		
Southbound								
L	154	3505	1.30	0.04	259.8	F		
TR	1752	5160	1.07	0.34	101.5	F	116.8	F

Intersection Delay = 200.5 (sec/veh) Intersection LOS = F

HCS+: Signalized Intersections Release 5.2

Analyst:
Agency: Gresham Smith and Partners
Date: 1/23/2006
Period: A.M
Project ID: Optimized (4 Lanes Shelbyville Rd.)
E/W St: Shelbyville Rd

Inter.: Shelbyville Rd/ 8 Mile Center
Area Type: All other areas
Jurisd:
Year : 2009
N/S St: 8 Mile Center

SIGNALIZED INTERSECTION SUMMARY

	Eastbound			Westbound			Northbound			Southbound		
	L	T	R	L	T	R	L	T	R	L	T	R
No. Lanes	1	2	0	1	2	1	0	1	0	1	1	0
LGConfig	L	TR		L	T	R		LTR		L	TR	
Volume	28	2320	6	6	2291	9	7	1	3	12	0	25
Lane Width	12.0	12.0		12.0	12.0	12.0		12.0		12.0	12.0	
RTOR Vol			0			0			0			0

Duration 0.25 Area Type: All other areas

Signal Operations

Phase Combination	1	2	3	4		5	6	7	8
EB Left	A				NB Left	A			
Thru		A			Thru	A			
Right		A			Right	A			
Peds					Peds				
WB Left	A				SB Left	A			
Thru		A			Thru	A			
Right		A			Right	A			
Peds					Peds	X			
NB Right					EB Right				
SB Right					WB Right				
Green	5.0	86.0			5.0				
Yellow	4.0	4.0			4.0				
All Red	0.0	1.0			1.0				

Cycle Length: 110.0 secs

Intersection Performance Summary

Appr/ Lane Grp	Lane Group Capacity	Adj Sat Flow Rate (s)	Ratios v/c	Ratios g/C	Lane Group Delay	Lane Group LOS	Approach Delay	Approach LOS
Eastbound								
L	82	1805	0.38	0.05	51.9	D		
TR	2827	3616	0.91	0.78	11.0	B	11.5	B
Westbound								
L	82	1805	0.09	0.05	50.8	D		
T	2829	3618	0.90	0.78	13.2	B	13.3	B
R	1263	1615	0.01	0.78	2.6	A		
Northbound								
LTR	65	1436	0.18	0.05	51.9	D	51.9	D
Southbound								
L	69	1520	0.19	0.05	51.9	D		
TR	73	1615	0.38	0.05	54.3	D	53.6	D

Intersection Delay = 12.8 (sec/veh) Intersection LOS = B

HCS+: Signalized Intersections Release 5.2

Analyst:
Agency: Gresham Smith and Partners
Date: 1/23/2006
Period: P.M
Project ID: Optimization
E/W St: Shelbyville Rd

Inter.: Shelbyville Rd/ 8 Mile Center
Area Type: All other areas
Jurisd:
Year : 2009
N/S St: 8 Mile Center

SIGNALIZED INTERSECTION SUMMARY

	Eastbound			Westbound			Northbound			Southbound		
	L	T	R	L	T	R	L	T	R	L	T	R
No. Lanes	1	2	0	1	2	1	0	1	0	1	1	0
LGConfig	L	TR		L	T	R		LTR		L	TR	
Volume	23	2204	0	2	2342	8	6	0	2	16	1	39
Lane Width	12.0	12.0		12.0	12.0	12.0		12.0		12.0	12.0	
RTOR Vol			0			0			0			0

Duration 0.25 Area Type: All other areas

Signal Operations

Phase Combination	1	2	3	4		5	6	7	8
EB Left	A				NB Left	A			
Thru		A			Thru	A			
Right		A			Right	A			
Peds					Peds				
WB Left	A				SB Left	A			
Thru		A			Thru	A			
Right		A			Right	A			
Peds					Peds	X			
NB Right					EB Right				
SB Right					WB Right				
Green	14.2	126.8			5.0				
Yellow	4.0	4.0			4.0				
All Red	0.0	1.0			1.0				

Cycle Length: 160.0 secs

Intersection Performance Summary

Appr/ Lane Grp	Lane Group Capacity	Adj Sat Flow Rate (s)	Ratios v/c	Ratios g/C	Lane Group Delay	Lane Group LOS	Approach Delay	Approach LOS
Eastbound								
L	160	1805	0.16	0.09	67.5	E		
TR	2867	3618	0.85	0.79	11.0	B	11.6	B
Westbound								
L	160	1805	0.01	0.09	66.5	E		
T	2867	3618	0.91	0.79	17.0	B	17.0	B
R	1280	1615	0.01	0.79	3.5	A		
Northbound								
LTR	41	1311	0.22	0.03	78.3	E	78.3	E
Southbound								
L	48	1520	0.38	0.03	80.8	F		
TR	51	1621	0.86	0.03	154.5	F	133.1	F

Intersection Delay = 15.9 (sec/veh) Intersection LOS = B

HCS+: Signalized Intersections Release 5.2

Analyst:
Agency: Gresham Smith and Partners
Date: 1/23/2006
Period: A.M
Project ID: Optimized
E/W St: Shelbyville Rd

Inter.: Shelbyville Rd/ Christian Way
Area Type: All other areas
Jurisd:
Year : 2009
N/S St: Christian Way

SIGNALIZED INTERSECTION SUMMARY

	Eastbound			Westbound			Northbound			Southbound		
	L	T	R	L	T	R	L	T	R	L	T	R
No. Lanes	1	2	1	1	2	0	1	1	1	0	1	0
LGConfig	L	T	R	L	TR		L	LT	R		LTR	
Volume	10	2120	70	40	2100	10	130	10	40	10	10	10
Lane Width	12.0	12.0	12.0	12.0	12.0		12.0	12.0	12.0		12.0	
RTOR Vol			23			0			37			9

Duration 0.25 Area Type: All other areas

Signal Operations

Phase Combination	1	2	3	4		5	6	7	8
EB Left	A	A			NB Left	A			
Thru		A			Thru	A			
Right		A			Right	A			
Peds					Peds	X			
WB Left	A				SB Left	A			
Thru	A	A			Thru	A			
Right	A	A			Right	A			
Peds					Peds				
NB Right					EB Right				
SB Right					WB Right				
Green	6.0	79.5				10.5			
Yellow	4.0	4.0				4.0			
All Red	0.0	1.0				1.0			

Cycle Length: 110.0 secs

Intersection Performance Summary

Appr/ Lane Grp	Lane Group Capacity	Adj Sat Flow Rate (s)	Ratios v/c	Ratios g/C	Lane Group Delay	Lane Group LOS	Approach Delay	Approach LOS
Eastbound								
L	69	85	0.16	0.81	3.3	A		
T	2615	3618	0.90	0.72	16.9	B	16.6	B
R	1167	1615	0.04	0.72	4.4	A		
Westbound								
L	98	1805	0.45	0.05	53.6	D		
TR	2941	3615	0.80	0.81	7.0	A	7.9	A
Northbound								
L	135	1410	1.07	0.10	146.1	F		
LT	181	1900	0.06	0.10	45.4	D	137.2	F
R	154	1615	0.02	0.10	45.1	D		
Southbound								
LTR	157	1648	0.15	0.10	46.1	D	46.1	D

Intersection Delay = 16.4 (sec/veh) Intersection LOS = B

HCS+: Signalized Intersections Release 5.2

Analyst:
Agency: Gresham Smith and Partners
Date: 1/23/2006
Period: P.M
Project ID: Optimized
E/W St: Shelbyville Rd

Inter.: Shelbyville Rd/ Christian Way
Area Type: All other areas
Jurisd:
Year : 2009
N/S St: Christian Way

SIGNALIZED INTERSECTION SUMMARY

	Eastbound			Westbound			Northbound			Southbound		
	L	T	R	L	T	R	L	T	R	L	T	R
No. Lanes	1	2	1	1	2	0	1	1	1	0	1	0
LGConfig	L	T	R	L	TR		L	LT	R		LTR	
Volume	10	2180	220	180	2250	10	280	10	220	10	10	10
Lane Width	12.0	12.0	12.0	12.0	12.0		12.0	12.0	12.0		12.0	
RTOR Vol			69			0			160			8

Duration 0.25 Area Type: All other areas

Signal Operations

Phase Combination	1	2	3	4		5	6	7	8
EB Left	A	A			NB Left	A			
Thru		A			Thru	A			
Right		A			Right	A			
Peds		X			Peds	X			
WB Left	A				SB Left	A			
Thru	A	A			Thru	A			
Right	A	A			Right	A			
Peds					Peds				
NB Right					EB Right				
SB Right					WB Right				
Green	13.1	106.0				26.9			
Yellow	4.0	4.0				4.0			
All Red	0.0	1.0				1.0			

Cycle Length: 160.0 secs

Intersection Performance Summary

Appr/ Lane Grp	Lane Group Capacity	Adj Sat Flow Rate (s)	Ratios v/c	Ratios g/C	Lane Group Delay	Lane Group LOS	Approach Delay	Approach LOS
Eastbound								
L	48	62	0.23	0.77	7.6	A		
T	2397	3618	1.01	0.66	48.0	D	45.4	D
R	1070	1615	0.16	0.66	10.2	B		
Westbound								
L	148	1805	1.35	0.08	269.3	F		
TR	2781	3615	0.90	0.77	18.6	B	37.1	D
Northbound								
L	237	1409	1.31	0.17	233.9	F		
LT	319	1900	0.03	0.17	55.7	E	198.6	F
R	272	1615	0.25	0.17	58.2	E		
Southbound								
LTR	287	1708	0.08	0.17	56.3	E	56.3	E

Intersection Delay = 51.9 (sec/veh) Intersection LOS = D

HCS+: Signalized Intersections Release 5.2

Analyst:
Agency: Gresham Smith and Partners
Date: 1/23/2006
Period: A.M
Project ID: Estimated
E/W St: Shelbyville Rd

Inter.: Shelbyville Rd/ Dorsey Ln
Area Type: All other areas
Jurisd:
Year : 2009

N/S St: Dorsey Ln

SIGNALIZED INTERSECTION SUMMARY

	Eastbound			Westbound			Northbound			Southbound		
	L	T	R	L	T	R	L	T	R	L	T	R
No. Lanes	1	2	1	1	2	0	1	1	0	1	1	1
LGConfig	L	T	R	L	TR		L	TR		L	T	R
Volume	85	660	30	10	1130	330	10	10	10	350	20	350
Lane Width	12.0	12.0	12.0	12.0	12.0		12.0	12.0		12.0	12.0	12.0
RTOR Vol			15			19			7			140

Duration 0.25 Area Type: All other areas

Signal Operations

Phase Combination	1	2	3	4		5	6	7	8
EB Left	A	A			NB Left	A			
Thru	A	A			Thru	A			
Right	A	A			Right	A			
Peds	X	X			Peds	X			
WB Left		A			SB Left	A			
Thru		A			Thru	A			
Right		A			Right	A			
Peds		X			Peds	X			
NB Right					EB Right				
SB Right					WB Right				
Green	10.0	56.3			30.0				
Yellow	4.0	4.3			4.0				
All Red	0.0	1.0			1.0				

Cycle Length: 110.6 secs

Intersection Performance Summary

Appr/ Lane Grp	Lane Group Capacity	Adj Sat Flow Rate (s)	Ratios v/c	Ratios g/C	Lane Group Delay	Lane Group LOS	Approach Delay	Approach LOS
Eastbound								
L	232	1805	0.41	0.64	21.1	C		
T	2300	3618	0.32	0.64	9.3	A	10.6	B
R	1027	1615	0.02	0.64	7.4	A		
Westbound								
L	361	710	0.03	0.51	13.6	B		
TR	1782	3500	0.90	0.51	31.2	C	31.1	C
Northbound								
L	383	1412	0.03	0.27	29.6	C		
TR	499	1839	0.03	0.27	29.6	C	29.6	C
Southbound								
L	386	1422	1.01	0.27	88.1	F		
T	515	1900	0.04	0.27	29.7	C	67.1	E
R	438	1615	0.53	0.27	35.6	D		

Intersection Delay = 32.9 (sec/veh) Intersection LOS = C

HCS+: Signalized Intersections Release 5.2

Analyst:
Agency: Gresham Smith and Partners
Date: 1/23/2006
Period: P.M
Project ID: Estimated
E/W St: Shelbyville Rd

Inter.: Shelbyville Rd/ Dorsey Ln
Area Type: All other areas
Jurisd:
Year : 2009

N/S St: Dorsey Ln

SIGNALIZED INTERSECTION SUMMARY

	Eastbound			Westbound			Northbound			Southbound		
	L	T	R	L	T	R	L	T	R	L	T	R
No. Lanes	1	2	1	1	2	0	1	1	0	1	1	1
LGConfig	L	T	R	L	TR		L	TR		L	T	R
Volume	310	1310	30	20	1020	410	20	20	20	380	20	150
Lane Width	12.0	12.0	12.0	12.0	12.0		12.0	12.0		12.0	12.0	12.0
RTOR Vol			6			20			17			124

Duration 0.25 Area Type: All other areas

Signal Operations

Phase Combination	1	2	3	4		5	6	7	8
EB Left	A	A			NB Left	A			
Thru	A	A			Thru	A			
Right	A	A			Right	A			
Peds	X	X			Peds	X			
WB Left		A			SB Left	A			
Thru		A			Thru	A			
Right		A			Right	A			
Peds		X			Peds	X			
NB Right					EB Right				
SB Right					WB Right				
Green	30.0	68.8			30.0				
Yellow	4.0	4.3			4.0				
All Red	0.0	1.0			1.0				

Cycle Length: 143.1 secs

Intersection Performance Summary

Appr/ Lane Grp	Lane Group Capacity	Adj Sat Flow Rate (s)	Ratios v/c	Ratios g/C	Lane Group Delay	Lane Group LOS	Approach Delay	Approach LOS
Eastbound								
L	431	1805	0.80	0.72	54.7	D		
T	2599	3618	0.56	0.72	9.8	A	18.2	B
R	1160	1615	0.02	0.72	5.8	A		
Westbound								
L	166	346	0.13	0.48	21.0	C		
TR	1667	3468	0.94	0.48	46.0	D	45.7	D
Northbound								
L	296	1412	0.07	0.21	45.5	D		
TR	391	1866	0.06	0.21	45.4	D	45.4	D
Southbound								
L	295	1408	1.43	0.21	268.8	F		
T	398	1900	0.06	0.21	45.3	D	244.7	F
R	339	1615	0.09	0.21	45.6	D		

Intersection Delay = 56.8 (sec/veh) Intersection LOS = E

HCS+: Signalized Intersections Release 5.2

Analyst:
Agency: Gresham Smith and Partners
Date: 1/24/2006
Period: A.M
Project ID: Optimized
E/W St: Shelbyville Rd

Inter.: Shelbyville Rd./ Hurstbourne
Area Type: All other areas
Jurisd:
Year : 2009
N/S St: Hurstbourne Pkwy

SIGNALIZED INTERSECTION SUMMARY

	Eastbound			Westbound			Northbound			Southbound		
	L	T	R	L	T	R	L	T	R	L	T	R
No. Lanes	2	2	1	2	2	0	2	2	1	1	2	1
LGConfig	L	T	R	L	TR		L	T	R	L	T	R
Volume	380	740	130	350	1090	150	230	960	160	180	690	520
Lane Width	12.0	12.0	12.0	12.0	12.0		12.0	12.0	12.0	12.0	12.0	12.0
RTOR Vol			62			6			119			250

Duration 0.25 Area Type: All other areas

Signal Operations

Phase Combination	1	2	3	4	5	6	7	8
EB Left	A				NB Left A			
Thru		A			Thru	A		
Right		A			Right	A		
Peds		X			Peds	X		
WB Left	A				SB Left A			
Thru		A			Thru	A		
Right		A			Right	A		
Peds		X			Peds	X		
NB Right					EB Right			
SB Right					WB Right			
Green	21.6	65.1			15.9	51.9		
Yellow	5.0	4.0			4.5	5.0		
All Red	2.0	1.5			1.5	2.0		

Cycle Length: 180.0 secs

Intersection Performance Summary

Appr/ Lane Grp	Lane Group Capacity	Adj Sat Flow Rate (s)	Ratios v/c	Ratios g/C	Lane Group Delay	Lane Group LOS	Approach Delay	Approach LOS
Eastbound								
L	421	3505	1.00	0.12	123.7	F		
T	1309	3618	0.63	0.36	48.4	D	71.9	E
R	584	1615	0.13	0.36	38.6	D		
Westbound								
L	421	3505	0.92	0.12	104.4	F		
TR	1285	3554	1.07	0.36	102.5	F	102.9	F
Northbound								
L	310	3505	0.83	0.09	97.2	F		
T	1043	3618	1.02	0.29	97.9	F	96.1	F
R	466	1615	0.10	0.29	47.0	D		
Southbound								
L	159	1805	1.26	0.09	238.9	F		
T	1043	3618	0.74	0.29	60.6	E	88.4	F
R	466	1615	0.64	0.29	59.0	E		

Intersection Delay = 90.9 (sec/veh) Intersection LOS = F

HCS+: Signalized Intersections Release 5.2

Analyst:
Agency: Gresham Smith and Partners
Date: 1/24/2006
Period: P.M
Project ID: Optimized
E/W St: Shelbyville Rd

Inter.: Shelbyville Rd./ Hurstbourne
Area Type: All other areas
Jurisd:
Year : 2009
N/S St: Hurstbourne Pkwy

SIGNALIZED INTERSECTION SUMMARY

	Eastbound			Westbound			Northbound			Southbound		
	L	T	R	L	T	R	L	T	R	L	T	R
No. Lanes	2	2	1	2	2	0	2	2	1	1	2	1
LGConfig	L	T	R	L	TR		L	T	R	L	T	R
Volume	400	1130	210	460	990	160	450	1350	410	350	880	430
Lane Width	12.0	12.0	12.0	12.0	12.0		12.0	12.0	12.0	12.0	12.0	12.0
RTOR Vol			65			6			243			260

Duration 0.25 Area Type: All other areas

Signal Operations

Phase Combination	1	2	3	4	5	6	7	8
EB Left	A				NB Left A			
Thru		A			Thru	A		
Right		A			Right	A		
Peds		X			Peds	X		
WB Left	A				SB Left A			
Thru		A			Thru	A		
Right		A			Right	A		
Peds		X			Peds	X		
NB Right					EB Right			
SB Right					WB Right			
Green	22.7	55.3			23.4	52.6		
Yellow	5.0	4.5			4.5	5.0		
All Red	2.0	1.5			1.5	2.0		

Cycle Length: 180.0 secs

Intersection Performance Summary

Appr/ Lane Grp	Lane Group Capacity	Adj Sat Flow Rate (s)	Ratios v/c	Ratios g/C	Lane Group Delay	Lane Group LOS	Approach Delay	Approach LOS
Eastbound								
L	442	3505	1.00	0.13	122.6	F		
T	1112	3618	1.13	0.31	132.4	F	122.8	F
R	496	1615	0.32	0.31	48.4	D		
Westbound								
L	442	3505	1.16	0.13	171.7	F		
TR	1089	3545	1.17	0.31	147.7	F	154.6	F
Northbound								
L	456	3505	1.10	0.13	149.2	F		
T	1057	3618	1.42	0.29	257.9	F	215.5	F
R	472	1615	0.39	0.29	51.5	D		
Southbound								
L	235	1805	1.66	0.13	391.4	F		
T	1057	3618	0.93	0.29	75.1	E	151.3	F
R	472	1615	0.40	0.29	51.6	D		

Intersection Delay = 163.9 (sec/veh) Intersection LOS = F

HCS+: Signalized Intersections Release 5.2

Analyst:
Agency: Gresham Smith and Partners
Date: 1/23/2006
Period: A.M
Project ID: Optimized
E/W St: Shelbyville Rd

Inter.: Shelbyville Rd/ Lyndon Ln
Area Type: All other areas
Jurisd:
Year : 2009

N/S St: Lyndon Ln

SIGNALIZED INTERSECTION SUMMARY

	Eastbound			Westbound			Northbound			Southbound		
	L	T	R	L	T	R	L	T	R	L	T	R
No. Lanes	1	2	0	1	2	1	1	1	0	0	1	0
LGConfig	L	TR		L	T	R	L	TR			LTR	
Volume	50	1810	60	20	1700	70	210	50	30	210	80	50
Lane Width	12.0	12.0		12.0	12.0	12.0	12.0	12.0			12.0	
RTOR Vol			2			12			20			13

Duration 0.25 Area Type: All other areas

Signal Operations

Phase Combination	1	2	3	4	5	6	7	8
EB Left	A				NB Left	A		
Thru		A			Thru	A		
Right		A			Right	A		
Peds		X			Peds	X		
WB Left	A				SB Left	A		
Thru		A			Thru	A		
Right		A			Right	A		
Peds					Peds	X		
NB Right					EB Right			
SB Right					WB Right			
Green	5.0	66.7			23.3			
Yellow	4.0	4.0			4.0			
All Red	1.0	1.0			1.0			

Cycle Length: 110.0 secs

Intersection Performance Summary

Appr/ Lane Grp	Lane Group Capacity	Adj Sat Flow Rate (s)	Ratios v/c	Ratios g/C	Lane Group Delay	Lane Group LOS	Approach Delay	Approach LOS
Eastbound								
L	82	1805	0.68	0.05	72.6	E		
TR	2184	3601	0.95	0.61	30.1	C	31.2	C
Westbound								
L	82	1805	0.27	0.05	52.5	D		
T	2194	3618	0.86	0.61	21.6	C	21.5	C
R	979	1615	0.07	0.61	8.9	A		
Northbound								
L	251	1186	0.93	0.21	80.4	F		
TR	392	1853	0.17	0.21	35.7	D	70.4	E
Southbound								
LTR	282	1332	1.29	0.21	196.7	F	196.7	F

Intersection Delay = 42.3 (sec/veh) Intersection LOS = D

HCS+: Signalized Intersections Release 5.2

Analyst:
Agency: Gresham Smith and Partners
Date: 1/23/2006
Period: P.M
Project ID: Optimized
E/W St: Shelbyville Rd

Inter.: Shelbyville Rd/ Lyndon Ln
Area Type: All other areas
Jurisd:
Year : 2009

N/S St: Lyndon Ln

SIGNALIZED INTERSECTION SUMMARY

	Eastbound			Westbound			Northbound			Southbound		
	L	T	R	L	T	R	L	T	R	L	T	R
No. Lanes	1	2	0	1	2	1	1	1	0	0	1	0
LGConfig	L	TR		L	T	R	L	TR			LTR	
Volume	120	1810	100	30	1760	140	150	70	40	160	80	50
Lane Width	12.0	12.0		12.0	12.0	12.0	12.0	12.0			12.0	
RTOR Vol			2			24			6			2

Duration 0.25 Area Type: All other areas

Signal Operations

Phase Combination	1	2	3	4	5	6	7	8
EB Left	A				NB Left	A		
Thru		A			Thru	A		
Right		A			Right	A		
Peds		X			Peds	X		
WB Left	A				SB Left	A		
Thru		A			Thru	A		
Right		A			Right	A		
Peds					Peds	X		
NB Right					EB Right			
SB Right					WB Right			
Green	7.6	87.4			30.0			
Yellow	4.0	4.0			4.0			
All Red	1.0	1.0			1.0			

Cycle Length: 140.0 secs

Intersection Performance Summary

Appr/ Lane Grp	Lane Group Capacity	Adj Sat Flow Rate (s)	Ratios v/c	Ratios g/C	Lane Group Delay	Lane Group LOS	Approach Delay	Approach LOS
Eastbound								
L	98	1805	1.36	0.05	279.5	F		
TR	2241	3590	0.95	0.62	33.5	C	48.0	D
Westbound								
L	98	1805	0.34	0.05	65.8	E		
T	2259	3618	0.87	0.62	25.3	C	25.1	C
R	1008	1615	0.13	0.62	10.8	B		
Northbound								
L	228	1063	0.73	0.21	62.8	E		
TR	387	1807	0.30	0.21	46.6	D	56.1	E
Southbound								
LTR	233	1085	1.37	0.21	247.8	F	247.8	F

Intersection Delay = 51.5 (sec/veh) Intersection LOS = D

HCS+: Signalized Intersections Release 5.2

Analyst:
Agency: Gresham Smith and Partners
Date: 1/23/2006
Period: A.M
Project ID: Estimated
E/W St: Shelbyville Rd

Inter.: Shelbyville / Whittington Pkwy
Area Type: All other areas
Jurisd:
Year : 2009

N/S St: Whittington Pkwy

SIGNALIZED INTERSECTION SUMMARY

	Eastbound			Westbound			Northbound			Southbound		
	L	T	R	L	T	R	L	T	R	L	T	R
No. Lanes	1	2	1	1	2	1	1	1	0	1	1	1
LGConfig	L	T	R	L	T	R	L	TR		L	T	R
Volume	63	1219	508	126	1714	20	60	8	31	26	2	19
Lane Width	12.0	12.0	12.0	12.0	12.0	12.0	12.0	12.0		12.0	12.0	12.0
RTOR Vol			150			0			27			0

Duration 0.25 Area Type: All other areas

Signal Operations

Phase Combination	1	2	3	4		5	6	7	8
EB Left	A				NB Left	A			
Thru	A				Thru	A			
Right	A				Right	A			
Peds	X				Peds	X			
WB Left	A				SB Left	A			
Thru	A				Thru	A			
Right	A				Right	A			
Peds	X				Peds	X			
NB Right					EB Right				
SB Right					WB Right				
Green	40.8				8.9				
Yellow	4.5				5.0				
All Red	1.0				1.0				

Cycle Length: 61.2 secs

Intersection Performance Summary

Appr/ Lane Grp	Lane Group Capacity	Adj Sat Flow Rate (s)	Ratios v/c	Ratios g/C	Lane Group Delay	Lane Group LOS	Approach Delay	Approach LOS
Eastbound								
L	124	186	0.56	0.67	6.0	A		
T	2412	3618	0.56	0.67	5.5	A	5.3	A
R	1077	1615	0.37	0.67	4.5	A		
Westbound								
L	207	310	0.68	0.67	14.7	B		
T	2412	3618	0.79	0.67	9.0	A	9.3	A
R	1077	1615	0.02	0.67	3.5	A		
Northbound								
L	209	1437	0.32	0.15	23.5	C		
TR	264	1812	0.05	0.15	22.5	C	23.4	C
Southbound								
L	207	1423	0.14	0.15	23.1	C		
T	276	1900	0.01	0.15	22.4	C	23.0	C
R	235	1615	0.09	0.15	22.8	C		

Intersection Delay = 8.0 (sec/veh) Intersection LOS = A

HCS+: Signalized Intersections Release 5.2

Analyst:
Agency: Gresham Smith and Partners
Date: 1/23/2006
Period: P.M
Project ID: Estimated
E/W St: Shelbyville Rd

Inter.: Shelbyville / Whittington Pkwy
Area Type: All other areas
Jurisd:
Year : 2009

N/S St: Whittington Pkwy

SIGNALIZED INTERSECTION SUMMARY

	Eastbound			Westbound			Northbound			Southbound		
	L	T	R	L	T	R	L	T	R	L	T	R
No. Lanes	1	2	1	1	2	1	1	1	0	1	1	1
LGConfig	L	T	R	L	T	R	L	TR		L	T	R
Volume	16	1576	253	68	1802	5	441	2	164	19	7	58
Lane Width	12.0	12.0	12.0	12.0	12.0	12.0	12.0	12.0		12.0	12.0	12.0
RTOR Vol			95			0			108			0

Duration 0.25 Area Type: All other areas

Signal Operations

Phase Combination	1	2	3	4		5	6	7	8
EB Left		A			NB Left	A			
Thru		A			Thru	A			
Right		A			Right	A			
Peds		X			Peds	X			
WB Left	A	A			SB Left	A			
Thru	A	A			Thru	A			
Right	A	A			Right	A			
Peds	X	X			Peds	X			
NB Right					EB Right				
SB Right					WB Right				
Green	18.8	50.0			40.0				
Yellow	4.0	4.0			5.0				
All Red	1.0	1.0			1.0				

Cycle Length: 124.8 secs

Intersection Performance Summary

Appr/ Lane Grp	Lane Group Capacity	Adj Sat Flow Rate (s)	Ratios v/c	Ratios g/C	Lane Group Delay	Lane Group LOS	Approach Delay	Approach LOS
Eastbound								
L	61	152	0.30	0.40	25.7	C		
T	1450	3618	1.21	0.40	131.5	F	120.9	F
R	647	1615	0.27	0.40	25.2	C		
Westbound								
L	333	1805	0.23	0.59	22.1	C		
T	2139	3618	0.94	0.59	31.9	C	31.5	C
R	955	1615	0.01	0.59	10.5	B		
Northbound								
L	458	1430	1.07	0.32	78.6	E		
TR	521	1624	0.12	0.32	30.0	C	72.9	E
Southbound								
L	436	1359	0.05	0.32	29.3	C		
T	609	1900	0.01	0.32	28.9	C	29.8	C
R	518	1615	0.12	0.32	30.1	C		

Intersection Delay = 73.5 (sec/veh) Intersection LOS = E

HCS+: Signalized Intersections Release 5.2

Analyst:
Agency: Gresham Smith and Partners
Date: 1/24/2006
Period: A.M
Project ID: Optimized
E/W St: Taylorsville Rd

Inter.: Taylorsville Rd./ Hurstbourne
Area Type: All other areas
Jurisd:
Year : 2009
N/S St: Hurstbourne Pkwy

SIGNALIZED INTERSECTION SUMMARY

	Eastbound			Westbound			Northbound			Southbound		
	L	T	R	L	T	R	L	T	R	L	T	R
No. Lanes	2	2	1	1	2	1	2	2	1	2	2	1
LGConfig	L	T	R	L	T	R	L	T	R	L	T	R
Volume	530	450	20	70	910	1050	170	1480	30	360	540	380
Lane Width	12.0	12.0	12.0	12.0	12.0	12.0	12.0	12.0	12.0	12.0	12.0	12.0
RTOR Vol			14			240			4			247

Duration 0.25 Area Type: All other areas

Signal Operations

Phase Combination	1	2	3	4		5	6	7	8
EB Left	A				NB Left	A			
Thru		A			Thru		A		
Right		A			Right		A		
Peds		X			Peds		X		
WB Left	A				SB Left	A			
Thru		A			Thru		A		
Right		A			Right		A		
Peds					Peds				
NB Right					EB Right				
SB Right					WB Right				
Green	21.5	54.8				14.8	62.9		
Yellow	4.5	5.0				4.5	5.0		
All Red	1.5	2.0				1.5	2.0		

Cycle Length: 180.0 secs

Intersection Performance Summary

Appr/ Lane Grp	Lane Group Capacity	Adj Sat Flow Rate (s)	Ratios v/c	Ratios g/C	Lane Group Delay	Lane Group LOS	Approach Delay	Approach LOS
Eastbound								
L	419	3505	1.41	0.12	275.7	F		
T	1101	3618	0.45	0.30	50.8	D	171.6	F
R	492	1615	0.01	0.30	43.7	D		
Westbound								
L	216	1805	0.36	0.12	74.0	E		
T	1101	3618	0.92	0.30	72.5	E	240.5	F
R	492	1615	1.83	0.30	443.7	F		
Northbound								
L	288	3505	0.66	0.08	85.5	F		
T	1264	3618	1.30	0.35	199.7	F	185.6	F
R	564	1615	0.05	0.35	38.8	D		
Southbound								
L	288	3505	1.39	0.08	277.6	F		
T	1264	3618	0.47	0.35	45.9	D	126.2	F
R	564	1615	0.26	0.35	42.2	D		

Intersection Delay = 189.8 (sec/veh) Intersection LOS = F

HCS+: Signalized Intersections Release 5.2

Analyst:
Agency: Gresham Smith and Partners
Date: 1/24/2006
Period: P.M
Project ID: Optimized
E/W St: Taylorsville Rd

Inter.: Taylorsville Rd/Hurstbourne Pk
Area Type: All other areas
Jurisd:
Year : 2009
N/S St: Hurstbourne Pkwy

SIGNALIZED INTERSECTION SUMMARY

	Eastbound			Westbound			Northbound			Southbound		
	L	T	R	L	T	R	L	T	R	L	T	R
No. Lanes	2	2	1	1	2	1	2	2	1	2	2	1
LGConfig	L	T	R	L	T	R	L	T	R	L	T	R
Volume	550	900	90	200	680	630	160	790	150	1000	1510	930
Lane Width	12.0	12.0	12.0	12.0	12.0	12.0	12.0	12.0	12.0	12.0	12.0	12.0
RTOR Vol			32			504			110			335

Duration 0.25 Area Type: All other areas

Signal Operations

Phase Combination	1	2	3	4		5	6	7	8
EB Left	A				NB Left	A			
Thru		A			Thru		A		
Right		A			Right		A		
Peds		X			Peds		X		
WB Left	A				SB Left	A			
Thru		A			Thru		A		
Right		A			Right		A		
Peds					Peds				
NB Right					EB Right				
SB Right					WB Right				
Green	21.0	35.7				49.2	48.1		
Yellow	4.5	5.0				4.5	5.0		
All Red	1.5	2.0				1.5	2.0		

Cycle Length: 180.0 secs

Intersection Performance Summary

Appr/ Lane Grp	Lane Group Capacity	Adj Sat Flow Rate (s)	Ratios v/c	Ratios g/C	Lane Group Delay	Lane Group LOS	Approach Delay	Approach LOS
Eastbound								
L	409	3505	1.49	0.12	314.3	F		
T	718	3618	1.39	0.20	257.4	F	270.6	F
R	320	1615	0.20	0.20	60.5	E		
Westbound								
L	211	1805	1.05	0.12	155.9	F		
T	718	3618	1.05	0.20	120.5	F	120.5	F
R	320	1615	0.44	0.20	64.3	E		
Northbound								
L	958	3505	0.19	0.27	50.2	D		
T	967	3618	0.91	0.27	76.0	E	70.7	E
R	432	1615	0.10	0.27	49.8	D		
Southbound								
L	958	3505	1.16	0.27	149.0	F		
T	967	3618	1.74	0.27	401.2	F	303.6	F
R	432	1615	1.53	0.27	316.0	F		

Intersection Delay = 233.3 (sec/veh) Intersection LOS = F

HCS+: Signalized Intersections Release 5.2

Analyst:
Agency: Gresham Smith and Partners
Date: 1/24/2006
Period: A.M
Project ID: Estimated
E/W St: Westport Rd

Inter.: Westport Rd./ Hurstbourne
Area Type: All other areas
Jurisd:
Year : 2009
N/S St: Hurstbourne Pkwy

SIGNALIZED INTERSECTION SUMMARY

	Eastbound			Westbound			Northbound			Southbound		
	L	T	R	L	T	R	L	T	R	L	T	R
No. Lanes	2	2	1	2	2	1	1	2	1	2	2	1
LGConfig	L	T	R	L	T	R	L	T	R	L	T	R
Volume	110	370	300	650	570	160	150	310	270	110	730	150
Lane Width	12.0	12.0	12.0	12.0	12.0	12.0	12.0	12.0	12.0	12.0	12.0	12.0
RTOR Vol			174			132			191			106

Duration 0.25 Area Type: All other areas

Signal Operations

Phase Combination	1	2	3	4		5	6	7	8
EB Left	A				NB Left	A	A		
Thru			A		Thru		A	A	
Right			A		Right		A	A	
Peds			X		Peds		X	X	
WB Left	A	A			SB Left	A			
Thru		A	A		Thru			A	
Right		A	A		Right			A	
Peds		X	X		Peds			X	
NB Right					EB Right				
SB Right					WB Right				
Green	8.6	6.4	16.3			8.4	1.0	29.7	
Yellow	4.0	4.3	4.3			4.5	4.5	4.5	
All Red	1.0	1.0	2.0			1.0	2.0	1.0	

Cycle Length: 104.5 secs

Intersection Performance Summary

Appr/ Lane Grp	Lane Group Capacity	Adj Sat Flow Rate (s)	Ratios v/c	Ratios g/C	Lane Group Delay	Lane Group LOS	Approach Delay	Approach LOS
Eastbound								
L	288	3505	0.42	0.08	46.6	D		
T	564	3618	0.73	0.16	46.8	D	46.0	D
R	252	1615	0.56	0.16	43.5	D		
Westbound								
L	671	3505	1.08	0.19	99.2	F		
T	969	3618	0.65	0.27	35.5	D	68.6	E
R	433	1615	0.07	0.27	28.6	C		
Northbound								
L	257	1805	0.65	0.14	48.0	D		
T	1288	3618	0.27	0.36	24.1	C	30.6	C
R	575	1615	0.15	0.36	23.0	C		
Southbound								
L	282	3505	0.43	0.08	46.8	D		
T	1028	3618	0.79	0.28	38.7	D	39.2	D
R	459	1615	0.11	0.28	27.7	C		

Intersection Delay = 50.2 (sec/veh) Intersection LOS = D

HCS+: Signalized Intersections Release 5.2

Analyst:
Agency: Gresham Smith and Partners
Date: 1/24/2006
Period: P.M
Project ID: Estimated
E/W St: Westport Rd

Inter.: Westport Rd./ Hurstbourne
Area Type: All other areas
Jurisd:
Year : 2009
N/S St: Hurstbourne Pkwy

SIGNALIZED INTERSECTION SUMMARY

	Eastbound			Westbound			Northbound			Southbound		
	L	T	R	L	T	R	L	T	R	L	T	R
No. Lanes	2	2	1	2	2	1	1	2	1	2	2	1
LGConfig	L	T	R	L	T	R	L	T	R	L	T	R
Volume	180	660	270	450	610	180	310	890	890	190	560	160
Lane Width	12.0	12.0	12.0	12.0	12.0	12.0	12.0	12.0	12.0	12.0	12.0	12.0
RTOR Vol			145			131			303			119

Duration 0.25 Area Type: All other areas

Signal Operations

Phase Combination	1	2	3	4		5	6	7	8
EB Left	A				NB Left	A	A		
Thru			A		Thru		A	A	
Right			A		Right		A	A	
Peds			X		Peds		X	X	
WB Left	A	A			SB Left	A			
Thru		A	A		Thru			A	
Right		A	A		Right			A	
Peds		X	X		Peds			X	
NB Right					EB Right				
SB Right					WB Right				
Green	11.4	4.4	32.9			11.3	7.4	36.1	
Yellow	4.0	4.3	4.3			4.0	4.5	4.5	
All Red	1.0	1.0	2.0			1.0	2.0	2.0	

Cycle Length: 138.1 secs

Intersection Performance Summary

Appr/ Lane Grp	Lane Group Capacity	Adj Sat Flow Rate (s)	Ratios v/c	Ratios g/C	Lane Group Delay	Lane Group LOS	Approach Delay	Approach LOS
Eastbound								
L	289	3505	0.69	0.08	68.6	E		
T	862	3618	0.85	0.24	58.4	E	58.5	E
R	385	1615	0.36	0.24	44.4	D		
Westbound								
L	528	3505	0.95	0.15	84.6	F		
T	1116	3618	0.61	0.31	41.6	D	58.7	E
R	498	1615	0.11	0.31	34.3	C		
Northbound								
L	310	1805	1.11	0.17	141.1	F		
T	1310	3618	0.75	0.36	41.2	D	83.4	F
R	585	1615	1.11	0.36	116.8	F		
Southbound								
L	287	3505	0.74	0.08	71.4	E		
T	946	3618	0.66	0.26	47.2	D	52.6	D
R	422	1615	0.11	0.26	38.9	D		

Intersection Delay = 67.1 (sec/veh) Intersection LOS = E

HCS+: Signalized Intersections Release 5.2

Analyst:
Agency: Gresham Smith and Partners
Date: 1/23/2006
Period: A.M
Project ID: Optimized
E/W St: Whittington Pkwy

Inter.: Whittington Pkwy / Hurstbourne
Area Type: All other areas
Jurisd:
Year : 2009

N/S St: Hurstbourne Pkwy

SIGNALIZED INTERSECTION SUMMARY

	Eastbound			Westbound			Northbound			Southbound		
	L	T	R	L	T	R	L	T	R	L	T	R
No. Lanes	0	1	1	0	1	1	1	3	0	1	2	1
LGConfig		LT	R		LT	R	L	TR		L	T	R
Volume	46	15	184	31	15	26	266	1278	15	5	929	236
Lane Width		12.0	12.0		12.0	12.0	12.0	12.0		12.0	12.0	12.0
RTOR Vol			162			23			1			83

Duration 0.25 Area Type: All other areas

Signal Operations

Phase Combination	1	2	3	4		5	6	7	8
EB Left	A				NB Left	A	A		
Thru	A				Thru		A	A	
Right	A				Right		A	A	
Peds	X				Peds				
WB Left	A				SB Left	A			
Thru	A				Thru			A	
Right	A				Right			A	
Peds					Peds				
NB Right					EB Right				
SB Right					WB Right				
Green	12.5					36.9	4.0	102.6	
Yellow	4.5					4.5	4.5	4.5	
All Red	1.5					1.5	1.5	1.5	

Cycle Length: 180.0 secs

Intersection Performance Summary

Appr/ Lane Grp	Lane Group Capacity	Adj Sat Flow Rate (s)	Ratios v/c	Ratios g/C	Lane Group Delay	Lane Group LOS	Approach Delay	Approach LOS
Eastbound								
LT	99	1419	0.69	0.07	99.9	F	94.7	F
R	112	1615	0.21	0.07	80.1	F		
Westbound								
LT	95	1374	0.54	0.07	86.9	F	86.4	F
R	112	1615	0.03	0.07	78.2	E		
Northbound								
L	470	1805	0.63	0.26	61.6	E		
TR	3232	5167	0.44	0.63	17.6	B	25.1	C
Southbound								
L	370	1805	0.02	0.21	57.1	E		
T	2062	3618	0.50	0.57	23.5	C	23.0	C
R	921	1615	0.18	0.57	18.7	B		

Intersection Delay = 27.4 (sec/veh) Intersection LOS = C

HCS+: Signalized Intersections Release 5.2

Analyst: Tony Lewis
Agency: Gresham Smith and Partners
Date: 1/23/2006
Period: P.M
Project ID: Optimized
E/W St: Whittington Pkwy

Inter.: Whittington Pkwy / Hurstbourne
Area Type: All other areas
Jurisd:
Year : 2009

N/S St: Hurstbourne Pkwy

SIGNALIZED INTERSECTION SUMMARY

	Eastbound			Westbound			Northbound			Southbound		
	L	T	R	L	T	R	L	T	R	L	T	R
No. Lanes	0	1	1	0	1	1	1	3	0	1	2	1
LGConfig		LT	R		LT	R	L	TR		L	T	R
Volume	302	20	461	46	26	20	179	1887	31	15	1401	133
Lane Width		12.0	12.0		12.0	12.0	12.0	12.0		12.0	12.0	12.0
RTOR Vol			150			14			1			39

Duration 0.25 Area Type: All other areas

Signal Operations

Phase Combination	1	2	3	4		5	6	7	8
EB Left	A				NB Left	A	A		
Thru	A				Thru		A	A	
Right	A				Right		A	A	
Peds	X				Peds				
WB Left	A				SB Left	A			
Thru	A				Thru			A	
Right	A				Right			A	
Peds					Peds				
NB Right					EB Right				
SB Right					WB Right				
Green	47.8					8.9	11.3	88.0	
Yellow	4.5					4.5	4.5	4.5	
All Red	1.5					1.5	1.5	1.5	

Cycle Length: 180.0 secs

Intersection Performance Summary

Appr/ Lane Grp	Lane Group Capacity	Adj Sat Flow Rate (s)	Ratios v/c	Ratios g/C	Lane Group Delay	Lane Group LOS	Approach Delay	Approach LOS
Eastbound								
LT	343	1291	1.04	0.27	126.6	F	100.1	F
R	429	1615	0.81	0.27	72.6	E		
Westbound								
LT	162	610	0.49	0.27	58.2	E	57.5	E
R	429	1615	0.02	0.27	48.8	D		
Northbound								
L	263	1805	0.76	0.15	85.7	F		
TR	3021	5164	0.71	0.59	27.1	C	32.2	C
Southbound								
L	89	1805	0.19	0.05	83.1	F		
T	1769	3618	0.88	0.49	46.8	D	45.8	D
R	790	1615	0.13	0.49	25.2	C		

Intersection Delay = 47.4 (sec/veh) Intersection LOS = D

HCS+: Unsignalized Intersections Release 5.2

TWO-WAY STOP CONTROL SUMMARY

Analyst:
Agency/Co.: Gresham Smith and Partners
Date Performed: 1/27/2006
Analysis Time Period: A.M
Intersection: Shelbyville/ Whipps Mill Rd
Jurisdiction:
Units: U. S. Customary
Analysis Year: 2009
Project ID:
East/West Street: Shelbyville Rd.
North/South Street: Whipps Mill Rd
Intersection Orientation: EW Study period (hrs): 0.25

Vehicle Volumes and Adjustments

Major Street: Approach	Eastbound			Westbound		
Movement	1	2	3	4	5	6
	L	T	R	L	T	R
Volume	400	2060	60	10	2070	10
Peak-Hour Factor, PHF	1.00	1.00	1.00	1.00	1.00	1.00
Hourly Flow Rate, HFR	400	2060	60	10	2070	10
Percent Heavy Vehicles	0	--	--	0	--	--
Median Type/Storage	TWLTL			/ 1		
RT Channelized?						No
Lanes	1	2	0	1	2	1
Configuration	L	T	TR	L	T	R
Upstream Signal?		Yes			Yes	

Minor Street: Approach	Northbound			Southbound		
Movement	7	8	9	10	11	12
	L	T	R	L	T	R
Volume	10	10	20	10	10	400
Peak Hour Factor, PHF	1.00	1.00	1.00	1.00	1.00	1.00
Hourly Flow Rate, HFR	10	10	20	10	10	400
Percent Heavy Vehicles	0	0	0	0	0	0
Percent Grade (%)		0			0	
Flared Approach: Exists?/Storage			No /			/
Lanes	0	1	0	0	1	1
Configuration		LTR		LT	R	

Delay, Queue Length, and Level of Service

Approach	EB	WB	Northbound			Southbound		
Movement	1	4	7	8	9	10	11	12
Lane Config	L	L		LTR		LT		R
v (vph)	400	10		40		20		400
C(m) (vph)	351	469						452
v/c	1.14	0.02						0.88
95% queue length	15.69	0.07						9.42
Control Delay	125.7	12.8						49.1
LOS	F	B						E
Approach Delay								
Approach LOS								

HCS+: Unsignalized Intersections Release 5.2

TWO-WAY STOP CONTROL SUMMARY

Analyst:
Agency/Co.: Gresham Smith and Partners
Date Performed: 1/27/2006
Analysis Time Period: P.M
Intersection: Shelbyville/ Whipps Mill Rd
Jurisdiction:
Units: U. S. Customary
Analysis Year: 2009
Project ID:
East/West Street: Shelbyville Rd.
North/South Street: Whipps Mill Rd
Intersection Orientation: EW Study period (hrs): 0.25

Vehicle Volumes and Adjustments

Major Street: Approach	Eastbound			Westbound		
Movement	1	2	3	4	5	6
	L	T	R	L	T	R
Volume	310	1700	30	10	1960	20
Peak-Hour Factor, PHF	1.00	1.00	1.00	1.00	1.00	1.00
Hourly Flow Rate, HFR	310	1700	30	10	1960	20
Percent Heavy Vehicles	0	--	--	0	--	--
Median Type/Storage	TWLTL			/ 1		
RT Channelized?						No
Lanes	1	2	0	1	2	1
Configuration	L	T	TR	L	T	R
Upstream Signal?		Yes			Yes	

Minor Street: Approach	Northbound			Southbound		
Movement	7	8	9	10	11	12
	L	T	R	L	T	R
Volume	10	10	10	10	10	330
Peak Hour Factor, PHF	1.00	1.00	1.00	1.00	1.00	1.00
Hourly Flow Rate, HFR	10	10	10	10	10	330
Percent Heavy Vehicles	0	0	0	0	0	0
Percent Grade (%)		0			0	
Flared Approach: Exists?/Storage			No /			/
Lanes	0	1	0	0	1	1
Configuration		LTR		LT	R	

Delay, Queue Length, and Level of Service

Approach	EB	WB	Northbound			Southbound		
Movement	1	4	7	8	9	10	11	12
Lane Config	L	L		LTR		LT		R
v (vph)	310	10		30		20		330
C(m) (vph)		581						
v/c		0.02						
95% queue length		0.05						
Control Delay		11.3						
LOS		B						
Approach Delay								
Approach LOS								

HCS+: Unsignalized Intersections Release 5.2

TWO-WAY STOP CONTROL SUMMARY

Analyst:
Agency/Co.: Gresham Smith and Partners
Date Performed: 1/24/2006
Analysis Time Period: A.M.
Intersection: Shelbyville Rd/ Blue Ridge Ma
Jurisdiction:
Units: U. S. Customary
Analysis Year: 2009
Project ID:
East/West Street: Shelbyville Rd
North/South Street: Blue Ridge Manor
Intersection Orientation: EW Study period (hrs): 0.25

Vehicle Volumes and Adjustments

Major Street: Approach	Eastbound			Westbound		
Movement	1	2	3	4	5	6
	L	T	R	L	T	R
Volume	0	758	8	7	1483	0
Peak-Hour Factor, PHF	1.00	1.00	1.00	1.00	1.00	1.00
Hourly Flow Rate, HFR	0	758	8	7	1483	0
Percent Heavy Vehicles	0	--	--	0	--	--
Median Type/Storage	TWLTL			/ 1		
RT Channelized?			No			
Lanes	1	2	1	1	2	0
Configuration	L	T	R	L	T	TR
Upstream Signal?		Yes			Yes	

Minor Street: Approach	Northbound			Southbound		
Movement	7	8	9	10	11	12
	L	T	R	L	T	R
Volume	17		17			
Peak Hour Factor, PHF	1.00		1.00			
Hourly Flow Rate, HFR	17		17			
Percent Heavy Vehicles	0		0			
Percent Grade (%)		0			0	
Flared Approach: Exists?/Storage			/			/
Lanes	1		1			
Configuration	L		R			

Delay, Queue Length, and Level of Service

Approach	EB	WB	Northbound			Southbound		
Movement	1	4	7	8	9	10	11	12
Lane Config	L	L	L		R			
v (vph)	0	7	17		17			
C(m) (vph)	535	1045	407		908			
v/c	0.00	0.01	0.04		0.02			
95% queue length	0.00	0.02	0.13		0.06			
Control Delay	11.7	8.5	14.2		9.0			
LOS	B	A	B		A			
Approach Delay				11.6				
Approach LOS				B				

HCS+: Unsignalized Intersections Release 5.2

TWO-WAY STOP CONTROL SUMMARY

Analyst:
Agency/Co.: Gresham Smith and Partners
Date Performed: 1/24/2006
Analysis Time Period: P.M.
Intersection: Shelbyville Rd/ Blue Ridge Ma
Jurisdiction:
Units: U. S. Customary
Analysis Year: 2009
Project ID:
East/West Street: Shelbyville Rd
North/South Street: Blue Ridge Manor
Intersection Orientation: EW Study period (hrs): 0.25

Vehicle Volumes and Adjustments

Major Street: Approach	Eastbound			Westbound		
Movement	1	2	3	4	5	6
	L	T	R	L	T	R
Volume	0	1627	23	27	1163	0
Peak-Hour Factor, PHF	1.00	1.00	1.00	1.00	1.00	1.00
Hourly Flow Rate, HFR	0	1627	23	27	1163	0
Percent Heavy Vehicles	0	--	--	0	--	--
Median Type/Storage	TWLTL			/ 1		
RT Channelized?			No			
Lanes	1	2	1	1	2	0
Configuration	L	T	R	L	T	TR
Upstream Signal?		Yes			Yes	

Minor Street: Approach	Northbound			Southbound		
Movement	7	8	9	10	11	12
	L	T	R	L	T	R
Volume	11		23			
Peak Hour Factor, PHF	1.00		1.00			
Hourly Flow Rate, HFR	11		23			
Percent Heavy Vehicles	0		0			
Percent Grade (%)		0			0	
Flared Approach: Exists?/Storage			/			/
Lanes	1		1			
Configuration	L		R			

Delay, Queue Length, and Level of Service

Approach	EB	WB	Northbound			Southbound		
Movement	1	4	7	8	9	10	11	12
Lane Config	L	L	L		R			
v (vph)	0	27	11		23			
C(m) (vph)	743	420	140		523			
v/c	0.00	0.06	0.08		0.04			
95% queue length	0.00	0.21	0.25		0.14			
Control Delay	9.8	14.2	32.9		12.2			
LOS	A	B	D		B			
Approach Delay				18.9				
Approach LOS				C				

HCS+: Unsignalized Intersections Release 5.2

TWO-WAY STOP CONTROL SUMMARY

Analyst:
Agency/Co.: Gresham Smith and Partners
Date Performed: 1/23/2006
Analysis Time Period: A.M
Intersection: Tamarisk Pkwy / Hurstbourne
Jurisdiction:
Units: U. S. Customary
Analysis Year: 2009
Project ID:
East/West Street: Tamarisk Pkwy
North/South Street: Hurstbourne Pkwy
Intersection Orientation: NS Study period (hrs): 0.25

Vehicle Volumes and Adjustments

Major Street: Approach	Northbound			Southbound		
Movement	1	2	3	4	5	6
	L	T	R	L	T	R
Volume	2	932	10	9	1348	3
Peak-Hour Factor, PHF	1.00	1.00	1.00	1.00	1.00	1.00
Hourly Flow Rate, HFR	2	932	10	9	1348	3
Percent Heavy Vehicles	0	--	--	0	--	--
Median Type/Storage	Raised curb / 1					
RT Channelized?			No			
Lanes	1	2	1	1	2	0
Configuration	L	T	R	L	T	TR
Upstream Signal?		Yes			Yes	

Minor Street: Approach	Westbound			Eastbound		
Movement	7	8	9	10	11	12
	L	T	R	L	T	R
Volume	70	0	46	1	0	0
Peak Hour Factor, PHF	1.00	1.00	1.00	1.00	1.00	1.00
Hourly Flow Rate, HFR	70	0	46	1	0	0
Percent Heavy Vehicles	0	0	0	0	0	0
Percent Grade (%)		0			0	
Flared Approach: Exists?/Storage			No /			Yes /1
Lanes	1	1	0	0	1	0
Configuration	L		TR		LTR	

Delay, Queue Length, and Level of Service

Approach	NB	SB	Westbound			Eastbound		
Movement	1	4	7	8	9	10	11	12
Lane Config	L	L	L		TR		LTR	
v (vph)	2	9	70		46		1	
C(m) (vph)	516	1046	274		786			
v/c	0.00	0.01	0.26		0.06			
95% queue length	0.01	0.03	0.99		0.19			
Control Delay	12.0	8.5	22.6		9.9		32.3	
LOS	B	A	C		A			
Approach Delay				17.5			32.3	
Approach LOS				C			D	

HCS+: Unsignalized Intersections Release 5.2

TWO-WAY STOP CONTROL SUMMARY

Analyst:
Agency/Co.: Gresham Smith and Partners
Date Performed: 1/23/2006
Analysis Time Period: P.M
Intersection: Tamarisk Pkwy / Hurstbourne
Jurisdiction:
Units: U. S. Customary
Analysis Year: 2009
Project ID:
East/West Street: Tamarisk Pkwy
North/South Street: Hurstbourne Pkwy
Intersection Orientation: NS Study period (hrs): 0.25

Vehicle Volumes and Adjustments

Major Street: Approach	Northbound			Southbound		
Movement	1	2	3	4	5	6
	L	T	R	L	T	R
Volume	6	1212	58	56	996	0
Peak-Hour Factor, PHF	1.00	1.00	1.00	1.00	1.00	1.00
Hourly Flow Rate, HFR	6	1212	58	56	996	0
Percent Heavy Vehicles	0	--	--	0	--	--
Median Type/Storage	Raised curb / 1					
RT Channelized?			Yes			
Lanes	1	2	1	1	2	0
Configuration	L	T	R	L	T	TR
Upstream Signal?		Yes			Yes	

Minor Street: Approach	Westbound			Eastbound		
Movement	7	8	9	10	11	12
	L	T	R	L	T	R
Volume	27	0	42	4	0	14
Peak Hour Factor, PHF	1.00	1.00	1.00	1.00	1.00	1.00
Hourly Flow Rate, HFR	27	0	42	4	0	14
Percent Heavy Vehicles	0	0	0	0	0	0
Percent Grade (%)		0			0	
Flared Approach: Exists?/Storage			No /			Yes /1
Lanes	1	1	0	0	1	0
Configuration	L		TR		LTR	

Delay, Queue Length, and Level of Service

Approach	NB	SB	Westbound			Eastbound		
Movement	1	4	7	8	9	10	11	12
Lane Config	L	L	L		TR		LTR	
v (vph)	6	56	27		42		18	
C(m) (vph)	703	788	213		763		672	
v/c	0.01	0.07	0.13		0.06		0.03	
95% queue length	0.03	0.23	0.43		0.17		0.08	
Control Delay	10.2	9.9	24.3		10.0-		15.2	
LOS	B	A	C		A		C	
Approach Delay				15.6			15.2	
Approach LOS				C			C	

HCS+: Signalized Intersections Release 5.2

Analyst:
Agency: Gresham Smith and Partners
Date: 1/23/2006
Period: A.M
Project ID: Optimized
E/W St: Linn Station

Inter.: Linn Station/Hurstbourne Pkwy
Area Type: All other areas
Jurisd:
Year : 2012

N/S St: Hurstbourne Pkwy

SIGNALIZED INTERSECTION SUMMARY

	Eastbound			Westbound			Northbound			Southbound		
	L	T	R	L	T	R	L	T	R	L	T	R
No. Lanes	1	1	1	2	1	1	2	3	1	2	3	1
LGConfig	L	LT	R	L	T	R	L	T	R	L	T	R
Volume	90	130	520	720	70	80	510	1580	1190	170	1130	80
Lane Width	12.0	12.0	12.0	12.0	12.0	12.0	12.0	12.0	12.0	12.0	12.0	12.0
RTOR Vol			315			71			420			52

Duration 0.25 Area Type: All other areas

Signal Operations

Phase Combination	1	2	3	4	5	6	7	8
EB Left	A				A	A		
Thru	A					A	A	
Right	A					A	A	
Peds	X					X	X	
WB Left		A			A			
Thru		A					A	
Right		A					A	
Peds		X					X	
NB Right								
SB Right								
Green	19.3	31.0			9.4	22.9	62.4	
Yellow	5.0	5.0			5.0	5.0	5.0	
All Red	2.0	2.0			2.0	2.0	2.0	

Cycle Length: 180.0 secs

Intersection Performance Summary

Appr/ Lane Grp	Lane Group Capacity	Adj Sat Flow Rate (s)	Ratios v/c	Ratios g/C	Lane Group Delay	Lane Group LOS	Approach Delay	Approach LOS
Eastbound								
L	194	1805	0.52	0.11	76.5	E		
LT	204	1900	0.71	0.11	80.1	F	152.8	F
R	173	1615	1.32	0.11	232.2	F		
Westbound								
L	604	3505	1.32	0.17	222.9	F		
T	327	1900	0.24	0.17	64.4	E	207.1	F
R	278	1615	0.04	0.17	62.1	E		
Northbound								
L	765	3505	0.74	0.22	66.7	E		
T	2654	5176	0.66	0.51	32.5	C	48.7	D
R	828	1615	1.03	0.51	70.0	E		
Southbound								
L	183	3505	1.03	0.05	160.7	F		
T	1794	5176	0.70	0.35	52.0	D	65.6	E
R	560	1615	0.06	0.35	39.2	D		

Intersection Delay = 84.4 (sec/veh) Intersection LOS = F

HCS+: Signalized Intersections Release 5.2

Analyst:
Agency: Gresham Smith and Partners
Date: 1/23/2006
Period: P.M
Project ID: Optimized
E/W St: Linn Station

Inter.: Linn Station/Hurstbourne Pkwy
Area Type: All other areas
Jurisd:
Year : 2012

N/S St: Hurstbourne Pkwy

SIGNALIZED INTERSECTION SUMMARY

	Eastbound			Westbound			Northbound			Southbound		
	L	T	R	L	T	R	L	T	R	L	T	R
No. Lanes	1	1	1	2	1	1	2	3	1	2	3	1
LGConfig	L	LT	R	L	T	R	L	T	R	L	T	R
Volume	90	200	610	1440	310	210	540	1750	1080	180	1680	60
Lane Width	12.0	12.0	12.0	12.0	12.0	12.0	12.0	12.0	12.0	12.0	12.0	12.0
RTOR Vol			330			150			720			26

Duration 0.25 Area Type: All other areas

Signal Operations

Phase Combination	1	2	3	4	5	6	7	8
EB Left	A				A	A		
Thru	A					A	A	
Right	A					A	A	
Peds	X					X	X	
WB Left		A			A			
Thru		A					A	
Right		A					A	
Peds		X					X	
NB Right								
SB Right								
Green	19.6	45.7			10.2	10.0	59.5	
Yellow	5.0	5.0			5.0	5.0	5.0	
All Red	2.0	2.0			2.0	2.0	2.0	

Cycle Length: 180.0 secs

Intersection Performance Summary

Appr/ Lane Grp	Lane Group Capacity	Adj Sat Flow Rate (s)	Ratios v/c	Ratios g/C	Lane Group Delay	Lane Group LOS	Approach Delay	Approach LOS
Eastbound								
L	197	1805	0.51	0.11	77.8	E		
LT	207	1900	1.07	0.11	163.3	F	289.4	F
R	176	1615	1.77	0.11	447.5	F		
Westbound								
L	890	3505	1.80	0.25	430.6	F		
T	482	1900	0.71	0.25	66.1	E	355.7	F
R	410	1615	0.16	0.25	52.5	D		
Northbound								
L	530	3505	1.13	0.15	157.2	F		
T	2200	5176	0.88	0.43	52.3	D	72.1	E
R	686	1615	0.58	0.43	40.8	D		
Southbound								
L	199	3505	1.01	0.06	150.0+	F		
T	1711	5176	1.09	0.33	111.4	F	113.8	F
R	534	1615	0.07	0.33	41.4	D		

Intersection Delay = 175.5 (sec/veh) Intersection LOS = F

HCS+: Signalized Intersections Release 5.2

Analyst:
Agency: Gresham Smith and Partners
Date: 1/23/2006
Period: A.M
Project ID: Optimized
E/W St: Shelbyville Rd

Inter.: Shelbyville Rd/ 8 Mile Center
Area Type: All other areas
Jurisd:
Year : 2012

N/S St: 8 Mile Center

SIGNALIZED INTERSECTION SUMMARY

	Eastbound			Westbound			Northbound			Southbound		
	L	T	R	L	T	R	L	T	R	L	T	R
No. Lanes	1	2	0	1	2	1	0	1	0	1	1	0
LGConfig	L	TR		L	T	R		LTR		L	TR	
Volume	28	2450	6	6	2416	9	7	1	3	12	0	25
Lane Width	12.0	12.0		12.0	12.0	12.0		12.0		12.0	12.0	
RTOR Vol			0			0			0			0

Duration 0.25 Area Type: All other areas

Signal Operations

Phase Combination	1	2	3	4		5	6	7	8
EB Left	A				NB Left	A			
Thru		A			Thru	A			
Right		A			Right	A			
Peds					Peds				
WB Left	A				SB Left	A			
Thru		A			Thru	A			
Right		A			Right	A			
Peds					Peds	X			
NB Right					EB Right				
SB Right					WB Right				
Green	5.0	86.0			5.0				
Yellow	4.0	4.0			4.0				
All Red	0.0	1.0			1.0				

Cycle Length: 110.0 secs

Intersection Performance Summary

Appr/ Lane Grp	Lane Group Capacity	Adj Sat Flow Rate (s)	Ratios v/c	Ratios g/C	Lane Group Delay	Lane Group LOS	Approach Delay	Approach LOS
Eastbound								
L	82	1805	0.38	0.05	51.6	D		
TR	2827	3616	0.97	0.78	13.7	B	14.1	B
Westbound								
L	82	1805	0.09	0.05	50.8	D		
T	2829	3618	0.95	0.78	18.2	B	18.2	B
R	1263	1615	0.01	0.78	2.6	A		
Northbound								
LTR	65	1436	0.18	0.05	51.9	D	51.9	D
Southbound								
L	69	1520	0.19	0.05	51.9	D		
TR	73	1615	0.38	0.05	54.3	D	53.6	D

Intersection Delay = 16.5 (sec/veh) Intersection LOS = B

HCS+: Signalized Intersections Release 5.2

Analyst:
Agency: Gresham Smith and Partners
Date: 1/23/2006
Period: P.M
Project ID: Optimization
E/W St: Shelbyville Rd

Inter.: Shelbyville Rd/ 8 Mile Center
Area Type: All other areas
Jurisd:
Year : 2012

N/S St: 8 Mile Center

SIGNALIZED INTERSECTION SUMMARY

	Eastbound			Westbound			Northbound			Southbound		
	L	T	R	L	T	R	L	T	R	L	T	R
No. Lanes	1	2	0	1	2	1	0	1	0	1	1	0
LGConfig	L	TR		L	T	R		LTR		L	TR	
Volume	23	2364	0	2	2502	8	6	0	2	16	1	39
Lane Width	12.0	12.0		12.0	12.0	12.0		12.0		12.0	12.0	
RTOR Vol			0			0			0			0

Duration 0.25 Area Type: All other areas

Signal Operations

Phase Combination	1	2	3	4		5	6	7	8
EB Left	A				NB Left	A			
Thru		A			Thru	A			
Right		A			Right	A			
Peds					Peds				
WB Left	A				SB Left	A			
Thru		A			Thru	A			
Right		A			Right	A			
Peds					Peds	X			
NB Right					EB Right				
SB Right					WB Right				
Green	5.0	136.0			5.0				
Yellow	4.0	4.0			4.0				
All Red	0.0	1.0			1.0				

Cycle Length: 160.0 secs

Intersection Performance Summary

Appr/ Lane Grp	Lane Group Capacity	Adj Sat Flow Rate (s)	Ratios v/c	Ratios g/C	Lane Group Delay	Lane Group LOS	Approach Delay	Approach LOS
Eastbound								
L	56	1805	0.46	0.03	76.7	E		
TR	3075	3618	0.85	0.85	6.8	A	7.5	A
Westbound								
L	56	1805	0.04	0.03	75.4	E		
T	3075	3618	0.90	0.85	12.0	B	12.1	B
R	1373	1615	0.01	0.85	1.8	A		
Northbound								
LTR	41	1311	0.22	0.03	78.3	E	78.3	E
Southbound								
L	48	1520	0.38	0.03	80.8	F		
TR	51	1621	0.86	0.03	154.5	F	133.1	F

Intersection Delay = 11.3 (sec/veh) Intersection LOS = B

HCS+: Signalized Intersections Release 5.2

Analyst:
Agency: Gresham Smith and Partners
Date: 1/23/2006
Period: A.M
Project ID: Optimized
E/W St: Shelbyville Rd

Inter.: Shelbyville Rd/ Christian Way
Area Type: All other areas
Jurisd:
Year : 2012

N/S St: Christian Way

SIGNALIZED INTERSECTION SUMMARY

	Eastbound			Westbound			Northbound			Southbound		
	L	T	R	L	T	R	L	T	R	L	T	R
No. Lanes	1	2	1	1	2	0	1	1	1	0	1	0
LGConfig	L	T	R	L	TR		L	LT	R		LTR	
Volume	10	2240	70	50	2210	10	130	10	40	10	10	10
Lane Width	12.0	12.0	12.0	12.0	12.0		12.0	12.0	12.0		12.0	
RTOR Vol			22			0			37			9

Duration 0.25 Area Type: All other areas

Signal Operations

Phase Combination	1	2	3	4		5	6	7	8
EB Left	A	A			NB Left	A			
Thru		A			Thru	A			
Right		A			Right	A			
Peds					Peds	X			
WB Left	A				SB Left	A			
Thru	A	A			Thru	A			
Right	A	A			Right	A			
Peds					Peds				
NB Right					EB Right				
SB Right					WB Right				
Green	6.0	79.8				10.2			
Yellow	4.0	4.0				4.0			
All Red	0.0	1.0				1.0			

Cycle Length: 110.0 secs

Intersection Performance Summary

Appr/ Lane Grp	Lane Group Capacity	Adj Sat Flow Rate (s)	Ratios v/c	Ratios g/C	Lane Group Delay	Lane Group LOS	Approach Delay	Approach LOS
Eastbound								
L	69	85	0.16	0.82	3.2	A		
T	2625	3618	0.95	0.73	21.7	C	21.3	C
R	1172	1615	0.05	0.73	4.3	A		
Westbound								
L	98	1805	0.57	0.05	58.5	E		
TR	2951	3615	0.84	0.82	8.1	A	9.2	A
Northbound								
L	131	1410	1.10	0.09	157.6	F		
LT	176	1900	0.06	0.09	45.7	D	147.7	F
R	150	1615	0.02	0.09	45.4	D		
Southbound								
LTR	152	1644	0.15	0.09	46.4	D	46.4	D

Intersection Delay = 19.4 (sec/veh) Intersection LOS = B

HCS+: Signalized Intersections Release 5.2

Analyst:
Agency: Gresham Smith and Partners
Date: 1/23/2006
Period: P.M
Project ID: Optimized
E/W St: Shelbyville Rd

Inter.: Shelbyville Rd/ Christian Way
Area Type: All other areas
Jurisd:
Year : 2012

N/S St: Christian Way

SIGNALIZED INTERSECTION SUMMARY

	Eastbound			Westbound			Northbound			Southbound		
	L	T	R	L	T	R	L	T	R	L	T	R
No. Lanes	1	2	1	1	2	0	1	1	1	0	1	0
LGConfig	L	T	R	L	TR		L	LT	R		LTR	
Volume	10	2350	240	190	2420	10	300	10	260	10	10	10
Lane Width	12.0	12.0	12.0	12.0	12.0		12.0	12.0	12.0		12.0	
RTOR Vol			71			0			165			8

Duration 0.25 Area Type: All other areas

Signal Operations

Phase Combination	1	2	3	4		5	6	7	8
EB Left	A	A			NB Left	A			
Thru		A			Thru	A			
Right		A			Right	A			
Peds		X			Peds	X			
WB Left	A				SB Left	A			
Thru	A	A			Thru	A			
Right	A	A			Right	A			
Peds					Peds				
NB Right					EB Right				
SB Right					WB Right				
Green	13.1	111.8				21.1			
Yellow	4.0	4.0				4.0			
All Red	0.0	1.0				1.0			

Cycle Length: 160.0 secs

Intersection Performance Summary

Appr/ Lane Grp	Lane Group Capacity	Adj Sat Flow Rate (s)	Ratios v/c	Ratios g/C	Lane Group Delay	Lane Group LOS	Approach Delay	Approach LOS
Eastbound								
L	48	59	0.23	0.81	6.1	A		
T	2528	3618	1.03	0.70	51.1	D	48.1	D
R	1128	1615	0.17	0.70	8.3	A		
Westbound								
L	148	1805	1.43	0.08	299.5	F		
TR	2912	3615	0.93	0.81	17.9	B	38.3	D
Northbound								
L	186	1409	1.79	0.13	445.8	F		
LT	251	1900	0.04	0.13	60.7	E	347.0	F
R	213	1615	0.50	0.13	66.4	E		
Southbound								
LTR	223	1694	0.11	0.13	61.4	E	61.4	E

Intersection Delay = 65.2 (sec/veh) Intersection LOS = E

HCS+: Signalized Intersections Release 5.2

Analyst:
Agency: Gresham Smith and Partners
Date: 1/23/2006
Period: A.M
Project ID: Estimated
E/W St: Shelbyville Rd

Inter.: Shelbyville Rd/ Dorsey Ln
Area Type: All other areas
Jurisd:
Year : 2012

N/S St: Dorsey Ln

SIGNALIZED INTERSECTION SUMMARY

	Eastbound			Westbound			Northbound			Southbound		
	L	T	R	L	T	R	L	T	R	L	T	R
No. Lanes	1	2	1	1	2	0	1	1	0	1	1	1
LGConfig	L	T	R	L	TR		L	TR		L	T	R
Volume	100	690	40	10	1150	340	10	10	10	360	30	360
Lane Width	12.0	12.0	12.0	12.0	12.0		12.0	12.0		12.0	12.0	12.0
RTOR Vol			18			19			7			7

Duration 0.25 Area Type: All other areas

Signal Operations

Phase Combination	1	2	3	4		5	6	7	8
EB Left	A	A			NB Left	A			
Thru	A	A			Thru	A			
Right	A	A			Right	A			
Peds	X	X			Peds	X			
WB Left		A			SB Left	A			
Thru		A			Thru	A			
Right		A			Right	A			
Peds		X			Peds	X			
NB Right					EB Right				
SB Right					WB Right				
Green	10.0	58.2			30.0				
Yellow	4.0	4.3			4.0				
All Red	0.0	1.0			1.0				

Cycle Length: 112.5 secs

Intersection Performance Summary

Appr/ Lane Grp	Lane Group Capacity	Adj Sat Flow Rate (s)	Ratios v/c	Ratios g/C	Lane Group Delay	Lane Group LOS	Approach Delay	Approach LOS
Eastbound								
L	227	1805	0.49	0.64	22.7	C		
T	2322	3618	0.33	0.64	9.2	A	10.9	B
R	1036	1615	0.02	0.64	7.3	A		
Westbound								
L	355	687	0.03	0.52	13.4	B		
TR	1810	3499	0.90	0.52	31.4	C	31.3	C
Northbound								
L	373	1398	0.03	0.27	30.5	C		
TR	490	1839	0.03	0.27	30.5	C	30.5	C
Southbound								
L	379	1422	1.06	0.27	102.8	F		
T	507	1900	0.07	0.27	30.8	C	81.0	F
R	431	1615	0.91	0.27	63.0	E		

Intersection Delay = 37.9 (sec/veh) Intersection LOS = D

HCS+: Signalized Intersections Release 5.2

Analyst:
Agency: Gresham Smith and Partners
Date: 1/23/2006
Period: P.M
Project ID: Estimated
E/W St: Shelbyville Rd

Inter.: Shelbyville Rd/ Dorsey Ln
Area Type: All other areas
Jurisd:
Year : 2012

N/S St: Dorsey Ln

SIGNALIZED INTERSECTION SUMMARY

	Eastbound			Westbound			Northbound			Southbound		
	L	T	R	L	T	R	L	T	R	L	T	R
No. Lanes	1	2	1	1	2	0	1	1	0	1	1	1
LGConfig	L	T	R	L	TR		L	TR		L	T	R
Volume	330	1330	40	30	1030	430	30	30	30	390	30	170
Lane Width	12.0	12.0	12.0	12.0	12.0		12.0	12.0		12.0	12.0	12.0
RTOR Vol			8			23			24			138

Duration 0.25 Area Type: All other areas

Signal Operations

Phase Combination	1	2	3	4		5	6	7	8
EB Left	A	A			NB Left	A			
Thru	A	A			Thru	A			
Right	A	A			Right	A			
Peds	X	X			Peds	X			
WB Left		A			SB Left	A			
Thru		A			Thru	A			
Right		A			Right	A			
Peds		X			Peds	X			
NB Right					EB Right				
SB Right					WB Right				
Green	30.0	70.9			30.0				
Yellow	4.0	4.3			4.0				
All Red	0.0	1.0			1.0				

Cycle Length: 145.2 secs

Intersection Performance Summary

Appr/ Lane Grp	Lane Group Capacity	Adj Sat Flow Rate (s)	Ratios v/c	Ratios g/C	Lane Group Delay	Lane Group LOS	Approach Delay	Approach LOS
Eastbound								
L	425	1805	0.86	0.72	63.7	E		
T	2614	3618	0.57	0.72	9.7	A	20.2	C
R	1167	1615	0.03	0.72	5.7	A		
Westbound								
L	165	338	0.20	0.49	21.7	C		
TR	1691	3464	0.94	0.49	46.5	D	46.0	D
Northbound								
L	289	1398	0.11	0.21	47.0	D		
TR	382	1850	0.10	0.21	46.8	D	46.9	D
Southbound								
L	287	1389	1.51	0.21	303.8	F		
T	393	1900	0.08	0.21	46.6	D	268.5	F
R	334	1615	0.11	0.21	46.9	D		

Intersection Delay = 61.5 (sec/veh) Intersection LOS = E

HCS+: Signalized Intersections Release 5.2

Analyst:
Agency: Gresham Smith and Partners
Date: 1/24/2006
Period: A.M
Project ID: Optimized
E/W St: Shelbyville Rd

Inter.: Shelbyville Rd./ Hurstbourne
Area Type: All other areas
Jurisd:
Year : 2012

N/S St: Hurstbourne Pkwy

SIGNALIZED INTERSECTION SUMMARY

	Eastbound			Westbound			Northbound			Southbound		
	L	T	R	L	T	R	L	T	R	L	T	R
No. Lanes	2	2	1	2	2	0	2	2	1	2	2	1
LGConfig	L	T	R	L	TR		L	T	R	L	T	R
Volume	390	750	130	360	1110	150	240	980	160	190	700	530
Lane Width	12.0	12.0	12.0	12.0	12.0		12.0	12.0	12.0	12.0	12.0	12.0
RTOR Vol			49			4			106			233

Duration 0.25 Area Type: All other areas

Signal Operations

Phase Combination	1	2	3	4	5	6	7	8
EB Left	A				NB Left A			
Thru		A			Thru	A		
Right		A			Right	A		
Peds		X			Peds	X		
WB Left	A				SB Left A			
Thru		A			Thru	A		
Right		A			Right	A		
Peds		X			Peds	X		
NB Right					EB Right			
SB Right					WB Right			
Green	21.6	65.1			14.1	53.7		
Yellow	5.0	4.0			4.5	5.0		
All Red	2.0	1.5			1.5	2.0		

Cycle Length: 180.0 secs

Intersection Performance Summary

Appr/ Lane Grp	Lane Group Capacity	Adj Sat Flow Rate (s)	Ratios v/c	Ratios g/C	Lane Group Delay	Lane Group LOS	Approach Delay	Approach LOS
Eastbound								
L	421	3505	1.03	0.12	130.6	F		
T	1309	3618	0.64	0.36	48.7	D	74.2	E
R	584	1615	0.15	0.36	39.0	D		
Westbound								
L	421	3505	0.95	0.12	110.0	F		
TR	1286	3555	1.08	0.36	108.9	F	109.1	F
Northbound								
L	275	3505	0.97	0.08	128.9	F		
T	1079	3618	1.01	0.30	92.8	F	97.7	F
R	482	1615	0.12	0.30	46.1	D		
Southbound								
L	275	3505	0.77	0.08	93.6	F		
T	1079	3618	0.72	0.30	58.8	E	64.6	E
R	482	1615	0.68	0.30	59.7	E		

Intersection Delay = 88.3 (sec/veh) Intersection LOS = F

HCS+: Signalized Intersections Release 5.2

Analyst:
Agency: Gresham Smith and Partners
Date: 1/24/2006
Period: P.M
Project ID: Optimized
E/W St: Shelbyville Rd

Inter.: Shelbyville Rd./ Hurstbourne
Area Type: All other areas
Jurisd:
Year : 2012

N/S St: Hurstbourne Pkwy

SIGNALIZED INTERSECTION SUMMARY

	Eastbound			Westbound			Northbound			Southbound		
	L	T	R	L	T	R	L	T	R	L	T	R
No. Lanes	2	2	1	2	2	0	2	2	1	2	2	1
LGConfig	L	T	R	L	TR		L	T	R	L	T	R
Volume	410	1150	220	460	1010	160	460	1370	420	360	900	440
Lane Width	12.0	12.0	12.0	12.0	12.0		12.0	12.0	12.0	12.0	12.0	12.0
RTOR Vol			55			5			199			254

Duration 0.25 Area Type: All other areas

Signal Operations

Phase Combination	1	2	3	4	5	6	7	8
EB Left	A				NB Left A			
Thru		A			Thru	A		
Right		A			Right	A		
Peds		X			Peds	X		
WB Left	A				SB Left A			
Thru		A			Thru	A		
Right		A			Right	A		
Peds		X			Peds	X		
NB Right					EB Right			
SB Right					WB Right			
Green	21.1	55.3			22.0	55.6		
Yellow	5.0	4.5			4.5	5.0		
All Red	2.0	1.5			1.5	2.0		

Cycle Length: 180.0 secs

Intersection Performance Summary

Appr/ Lane Grp	Lane Group Capacity	Adj Sat Flow Rate (s)	Ratios v/c	Ratios g/C	Lane Group Delay	Lane Group LOS	Approach Delay	Approach LOS
Eastbound								
L	411	3505	1.11	0.12	156.9	F		
T	1112	3618	1.15	0.31	140.3	F	135.5	F
R	496	1615	0.37	0.31	49.2	D		
Westbound								
L	411	3505	1.24	0.12	208.0	F		
TR	1089	3545	1.19	0.31	156.5	F	171.0	F
Northbound								
L	428	3505	1.19	0.12	187.2	F		
T	1118	3618	1.36	0.31	230.7	F	201.6	F
R	499	1615	0.49	0.31	51.5	D		
Southbound								
L	428	3505	0.93	0.12	106.1	F		
T	1118	3618	0.89	0.31	68.9	E	75.7	E
R	499	1615	0.41	0.31	49.9	D		

Intersection Delay = 151.1 (sec/veh) Intersection LOS = F

HCS+: Signalized Intersections Release 5.2

Analyst:
Agency: Gresham Smith and Partners
Date: 1/23/2006
Period: A.M
Project ID: Optimized
E/W St: Shelbyville Rd

Inter.: Shelbyville Rd/ Lyndon Ln
Area Type: All other areas
Jurisd:
Year : 2012

N/S St: Lyndon Ln

SIGNALIZED INTERSECTION SUMMARY

	Eastbound			Westbound			Northbound			Southbound		
	L	T	R	L	T	R	L	T	R	L	T	R
No. Lanes	1	2	0	1	2	1	1	1	0	0	1	0
LGConfig	L	TR		L	T	R	L	TR			LTR	
Volume	60	2000	60	30	1860	80	230	60	40	230	80	60
Lane Width	12.0	12.0		12.0	12.0	12.0	12.0	12.0			12.0	
RTOR Vol			2			10			22			14

Duration 0.25 Area Type: All other areas

Signal Operations

Phase Combination	1	2	3	4	5	6	7	8
EB Left	A				NB Left	A		
Thru		A			Thru	A		
Right		A			Right	A		
Peds		X			Peds	X		
WB Left	A				SB Left	A		
Thru		A			Thru	A		
Right		A			Right	A		
Peds					Peds	X		
NB Right					EB Right			
SB Right					WB Right			
Green	5.0	67.5			22.5			
Yellow	4.0	4.0			4.0			
All Red	1.0	1.0			1.0			

Cycle Length: 110.0 secs

Intersection Performance Summary

Appr/ Lane Grp	Lane Group Capacity	Adj Sat Flow Rate (s)	Ratios v/c	Ratios g/C	Lane Group Delay	Lane Group LOS	Approach Delay	Approach LOS
Eastbound								
L	82	1805	0.82	0.05	97.3	F		
TR	2210	3602	1.03	0.61	49.9	D	51.3	D
Westbound								
L	82	1805	0.40	0.05	54.3	D		
T	2220	3618	0.93	0.61	27.0	C	26.7	C
R	991	1615	0.08	0.61	8.7	A		
Northbound								
L	248	1213	1.03	0.20	109.5	F		
TR	375	1834	0.23	0.20	36.9	D	91.1	F
Southbound								
LTR	247	1207	1.60	0.20	333.4	F	333.4	F

Intersection Delay = 64.9 (sec/veh) Intersection LOS = E

HCS+: Signalized Intersections Release 5.2

Analyst:
Agency: Gresham Smith and Partners
Date: 1/23/2006
Period: P.M
Project ID: Optimized
E/W St: Shelbyville Rd

Inter.: Shelbyville Rd/ Lyndon Ln
Area Type: All other areas
Jurisd:
Year : 2012

N/S St: Lyndon Ln

SIGNALIZED INTERSECTION SUMMARY

	Eastbound			Westbound			Northbound			Southbound		
	L	T	R	L	T	R	L	T	R	L	T	R
No. Lanes	1	2	0	1	2	1	1	1	0	0	1	0
LGConfig	L	TR		L	T	R	L	TR			LTR	
Volume	130	1990	110	30	1930	150	160	80	40	170	90	50
Lane Width	12.0	12.0		12.0	12.0	12.0	12.0	12.0			12.0	
RTOR Vol			3			14			13			6

Duration 0.25 Area Type: All other areas

Signal Operations

Phase Combination	1	2	3	4	5	6	7	8
EB Left	A				NB Left	A		
Thru		A			Thru	A		
Right		A			Right	A		
Peds		X			Peds	X		
WB Left	A				SB Left	A		
Thru		A			Thru	A		
Right		A			Right	A		
Peds					Peds	X		
NB Right					EB Right			
SB Right					WB Right			
Green	7.6	85.7			31.7			
Yellow	4.0	4.0			4.0			
All Red	1.0	1.0			1.0			

Cycle Length: 140.0 secs

Intersection Performance Summary

Appr/ Lane Grp	Lane Group Capacity	Adj Sat Flow Rate (s)	Ratios v/c	Ratios g/C	Lane Group Delay	Lane Group LOS	Approach Delay	Approach LOS
Eastbound								
L	98	1805	1.47	0.05	324.5	F		
TR	2198	3590	1.06	0.61	64.6	E	79.7	E
Westbound								
L	98	1805	0.34	0.05	65.8	E		
T	2215	3618	0.97	0.61	38.3	D	37.0	D
R	989	1615	0.15	0.61	11.7	B		
Northbound								
L	240	1061	0.74	0.23	62.0	E		
TR	414	1828	0.29	0.23	45.2	D	55.3	E
Southbound								
LTR	249	1101	1.36	0.23	238.9	F	238.9	F

Intersection Delay = 70.0 (sec/veh) Intersection LOS = E

HCS+: Signalized Intersections Release 5.2

Analyst:
Agency: Gresham Smith and Partners
Date: 1/23/2006
Period: A.M
Project ID: Estimated
E/W St: Shelbyville Rd

Inter.: Shelbyville / Whittington Pkwy
Area Type: All other areas
Jurisd:
Year : 2012

N/S St: Whittington Pkwy

SIGNALIZED INTERSECTION SUMMARY

	Eastbound			Westbound			Northbound			Southbound		
	L	T	R	L	T	R	L	T	R	L	T	R
No. Lanes	1	2	1	1	2	1	1	1	0	1	1	1
LGConfig	L	T	R	L	T	R	L	TR		L	T	R
Volume	63	1239	508	126	1754	20	60	8	31	26	2	19
Lane Width	12.0	12.0	12.0	12.0	12.0	12.0	12.0	12.0		12.0	12.0	12.0
RTOR Vol			150			0			27			0

Duration 0.25 Area Type: All other areas

Signal Operations

Phase Combination	1	2	3	4		5	6	7	8
EB Left	A				NB Left	A			
Thru	A				Thru	A			
Right	A				Right	A			
Peds	X				Peds	X			
WB Left	A				SB Left	A			
Thru	A				Thru	A			
Right	A				Right	A			
Peds	X				Peds	X			
NB Right					EB Right				
SB Right					WB Right				
Green	42.4				8.9				
Yellow	4.0				5.0				
All Red	1.0				1.0				

Cycle Length: 62.3 secs

Intersection Performance Summary

Appr/ Lane Grp	Lane Group Capacity	Adj Sat Flow Rate (s)	Ratios v/c	Ratios g/C	Lane Group Delay	Lane Group LOS	Approach Delay	Approach LOS
Eastbound								
L	122	179	0.57	0.68	5.8	A		
T	2462	3618	0.56	0.68	5.2	A	5.0	A
R	1099	1615	0.36	0.68	4.2	A		
Westbound								
L	204	300	0.69	0.68	15.2	B		
T	2462	3618	0.79	0.68	8.7	A	9.1	A
R	1099	1615	0.02	0.68	3.2	A		
Northbound								
L	205	1437	0.33	0.14	24.1	C		
TR	259	1812	0.05	0.14	23.1	C	23.9	C
Southbound								
L	203	1423	0.14	0.14	23.7	C		
T	271	1900	0.01	0.14	22.9	C	23.5	C
R	231	1615	0.09	0.14	23.4	C		

Intersection Delay = 7.7 (sec/veh) Intersection LOS = A

HCS+: Signalized Intersections Release 5.2

Analyst:
Agency: Gresham Smith and Partners
Date: 1/23/2006
Period: P.M
Project ID: Estimated
E/W St: Shelbyville Rd

Inter.: Shelbyville / Whittington Pkwy
Area Type: All other areas
Jurisd:
Year : 2012

N/S St: Whittington Pkwy

SIGNALIZED INTERSECTION SUMMARY

	Eastbound			Westbound			Northbound			Southbound		
	L	T	R	L	T	R	L	T	R	L	T	R
No. Lanes	1	2	1	1	2	1	1	1	0	1	1	1
LGConfig	L	T	R	L	T	R	L	TR		L	T	R
Volume	16	1616	253	68	1842	5	441	2	164	19	7	58
Lane Width	12.0	12.0	12.0	12.0	12.0	12.0	12.0	12.0		12.0	12.0	12.0
RTOR Vol			93			0			108			0

Duration 0.25 Area Type: All other areas

Signal Operations

Phase Combination	1	2	3	4		5	6	7	8
EB Left		A			NB Left	A			
Thru		A			Thru	A			
Right		A			Right	A			
Peds		X			Peds	X			
WB Left	A	A			SB Left	A			
Thru	A	A			Thru	A			
Right	A	A			Right	A			
Peds	X	X			Peds	X			
NB Right					EB Right				
SB Right					WB Right				
Green	18.8	50.0			40.0				
Yellow	4.0	4.0			5.0				
All Red	1.0	1.0			1.0				

Cycle Length: 124.8 secs

Intersection Performance Summary

Appr/ Lane Grp	Lane Group Capacity	Adj Sat Flow Rate (s)	Ratios v/c	Ratios g/C	Lane Group Delay	Lane Group LOS	Approach Delay	Approach LOS
Eastbound								
L	61	152	0.30	0.40	25.7	C		
T	1450	3618	1.24	0.40	145.4	F	133.5	F
R	647	1615	0.28	0.40	25.2	C		
Westbound								
L	333	1805	0.23	0.59	22.1	C		
T	2139	3618	0.96	0.59	35.1	D	34.6	C
R	955	1615	0.01	0.59	10.5	B		
Northbound								
L	458	1430	1.07	0.32	78.6	E		
TR	521	1624	0.12	0.32	30.0	C	72.9	E
Southbound								
L	436	1359	0.05	0.32	29.3	C		
T	609	1900	0.01	0.32	28.9	C	29.8	C
R	518	1615	0.12	0.32	30.1	C		

Intersection Delay = 80.3 (sec/veh) Intersection LOS = F

HCS+: Signalized Intersections Release 5.2

Analyst:
Agency: Gresham Smith and Partners
Date: 1/24/2006
Period: A.M
Project ID: Optimized
E/W St: Taylorsville Rd

Inter.: Taylorsville Rd./ Hurstbourne
Area Type: All other areas
Jurisd:
Year : 2012
N/S St: Hurstbourne Pkwy

SIGNALIZED INTERSECTION SUMMARY

	Eastbound			Westbound			Northbound			Southbound		
	L	T	R	L	T	R	L	T	R	L	T	R
No. Lanes	2	2	1	1	2	1	2	2	1	2	2	1
LGConfig	L	T	R	L	T	R	L	T	R	L	T	R
Volume	560	480	30	70	960	1110	180	1560	30	380	570	400
Lane Width	12.0	12.0	12.0	12.0	12.0	12.0	12.0	12.0	12.0	12.0	12.0	12.0
RTOR Vol			21			250			4			258

Duration 0.25 Area Type: All other areas

Signal Operations

Phase Combination	1	2	3	4		5	6	7	8
EB Left	A				NB Left	A			
Thru		A			Thru		A		
Right		A			Right		A		
Peds		X			Peds		X		
WB Left	A				SB Left	A			
Thru		A			Thru		A		
Right		A			Right		A		
Peds					Peds				
NB Right					EB Right				
SB Right					WB Right				
Green	21.5	54.8				14.8	62.9		
Yellow	4.5	5.0				4.5	5.0		
All Red	1.5	2.0				1.5	2.0		

Cycle Length: 180.0 secs

Intersection Performance Summary

Appr/ Lane Grp	Lane Group Capacity	Adj Sat Flow Rate (s)	Ratios v/c	Ratios g/C	Lane Group Delay	Lane Group LOS	Approach Delay	Approach LOS
Eastbound								
L	419	3505	1.48	0.12	309.7	F		
T	1101	3618	0.48	0.30	51.4	D	189.3	F
R	492	1615	0.02	0.30	43.8	D		
Westbound								
L	216	1805	0.36	0.12	74.0	E		
T	1101	3618	0.97	0.30	81.8	F	269.2	F
R	492	1615	1.94	0.30	494.4	F		
Northbound								
L	288	3505	0.69	0.08	87.5	F		
T	1264	3618	1.37	0.35	230.6	F	213.2	F
R	564	1615	0.05	0.35	38.8	D		
Southbound								
L	288	3505	1.47	0.08	310.1	F		
T	1264	3618	0.50	0.35	46.5	D	137.7	F
R	564	1615	0.28	0.35	42.5	D		

Intersection Delay = 212.9 (sec/veh) Intersection LOS = F

HCS+: Signalized Intersections Release 5.2

Analyst:
Agency: Gresham Smith and Partners
Date: 1/24/2006
Period: P.M
Project ID: Optimized
E/W St: Taylorsville Rd

Inter.: Taylorsville Rd/Hurstbourne Pk
Area Type: All other areas
Jurisd:
Year : 2012
N/S St: Hurstbourne Pkwy

SIGNALIZED INTERSECTION SUMMARY

	Eastbound			Westbound			Northbound			Southbound		
	L	T	R	L	T	R	L	T	R	L	T	R
No. Lanes	2	2	1	1	2	1	2	2	1	2	2	1
LGConfig	L	T	R	L	T	R	L	T	R	L	T	R
Volume	580	950	100	210	720	660	170	840	160	1060	1590	980
Lane Width	12.0	12.0	12.0	12.0	12.0	12.0	12.0	12.0	12.0	12.0	12.0	12.0
RTOR Vol			51			145			41			350

Duration 0.25 Area Type: All other areas

Signal Operations

Phase Combination	1	2	3	4		5	6	7	8
EB Left	A				NB Left	A			
Thru		A			Thru		A		
Right		A			Right		A		
Peds		X			Peds		X		
WB Left	A				SB Left	A			
Thru		A			Thru		A		
Right		A			Right		A		
Peds					Peds				
NB Right					EB Right				
SB Right					WB Right				
Green	18.8	41.7				47.3	46.2		
Yellow	4.5	5.0				4.5	5.0		
All Red	1.5	2.0				1.5	2.0		

Cycle Length: 180.0 secs

Intersection Performance Summary

Appr/ Lane Grp	Lane Group Capacity	Adj Sat Flow Rate (s)	Ratios v/c	Ratios g/C	Lane Group Delay	Lane Group LOS	Approach Delay	Approach LOS
Eastbound								
L	366	3505	1.76	0.10	433.4	F		
T	838	3618	1.26	0.23	195.8	F	278.7	F
R	374	1615	0.14	0.23	55.1	E		
Westbound								
L	189	1805	1.23	0.10	222.6	F		
T	838	3618	0.95	0.23	89.0	F	190.9	F
R	374	1615	1.53	0.23	320.6	F		
Northbound								
L	921	3505	0.21	0.26	51.8	D		
T	929	3618	1.00	0.26	97.5	F	86.1	F
R	415	1615	0.32	0.26	54.6	D		
Southbound								
L	921	3505	1.28	0.26	200.3	F		
T	929	3618	1.90	0.26	476.9	F	370.1	F
R	415	1615	1.69	0.26	386.2	F		

Intersection Delay = 272.7 (sec/veh) Intersection LOS = F

HCS+: Signalized Intersections Release 5.2

Analyst:
Agency: Gresham Smith and Partners
Date: 1/24/2006
Period: A.M
Project ID: Estimated
E/W St: Westport Rd

Inter.: Westport Rd./ Hurstbourne
Area Type: All other areas
Jurisd:
Year : 2012
N/S St: Hurstbourne Pkwy

SIGNALIZED INTERSECTION SUMMARY

	Eastbound			Westbound			Northbound			Southbound		
	L	T	R	L	T	R	L	T	R	L	T	R
No. Lanes	2	2	1	2	2	1	1	2	1	2	2	1
LGConfig	L	T	R	L	T	R	L	T	R	L	T	R
Volume	110	380	310	660	580	160	150	310	280	110	750	160
Lane Width	12.0	12.0	12.0	12.0	12.0	12.0	12.0	12.0	12.0	12.0	12.0	12.0
RTOR Vol			143			110			192			78

Duration 0.25 Area Type: All other areas

Signal Operations

Phase Combination	1	2	3	4		5	6	7	8
EB Left	A				NB Left	A	A		
Thru			A		Thru		A	A	
Right			A		Right		A	A	
Peds			X		Peds		X	X	
WB Left	A	A			SB Left	A			
Thru		A	A		Thru			A	
Right		A	A		Right			A	
Peds		X	X		Peds			X	
NB Right					EB Right				
SB Right					WB Right				
Green	8.7	6.3	20.0			8.5	1.0	32.4	
Yellow	4.0	4.3	4.3			4.5	4.5	4.5	
All Red	1.0	1.0	2.0			1.0	2.0	1.0	

Cycle Length: 111.0 secs

Intersection Performance Summary

Appr/ Lane Grp	Lane Group Capacity	Adj Sat Flow Rate (s)	Ratios v/c	Ratios g/C	Lane Group Delay	Lane Group LOS	Approach Delay	Approach LOS
Eastbound								
L	275	3505	0.44	0.08	50.0	D		
T	652	3618	0.65	0.18	44.5	D	46.0	D
R	291	1615	0.64	0.18	46.8	D		
Westbound								
L	632	3505	1.16	0.18	134.2	F		
T	1030	3618	0.63	0.28	35.7	D	85.9	F
R	460	1615	0.12	0.28	29.5	C		
Northbound								
L	244	1805	0.68	0.14	53.4	D		
T	1301	3618	0.26	0.36	25.3	C	32.9	C
R	581	1615	0.17	0.36	24.4	C		
Southbound								
L	268	3505	0.46	0.08	50.3	D		
T	1056	3618	0.79	0.29	40.2	D	40.5	D
R	471	1615	0.19	0.29	29.7	C		

Intersection Delay = 57.4 (sec/veh) Intersection LOS = E

HCS+: Signalized Intersections Release 5.2

Analyst:
Agency: Gresham Smith and Partners
Date: 1/24/2006
Period: P.M
Project ID: Estimated
E/W St: Westport Rd

Inter.: Westport Rd./ Hurstbourne
Area Type: All other areas
Jurisd:
Year : 2012
N/S St: Hurstbourne Pkwy

SIGNALIZED INTERSECTION SUMMARY

	Eastbound			Westbound			Northbound			Southbound		
	L	T	R	L	T	R	L	T	R	L	T	R
No. Lanes	2	2	1	2	2	1	1	2	1	2	2	1
LGConfig	L	T	R	L	T	R	L	T	R	L	T	R
Volume	180	680	280	470	630	180	320	920	910	190	570	160
Lane Width	12.0	12.0	12.0	12.0	12.0	12.0	12.0	12.0	12.0	12.0	12.0	12.0
RTOR Vol			128			114			303			102

Duration 0.25 Area Type: All other areas

Signal Operations

Phase Combination	1	2	3	4		5	6	7	8
EB Left	A				NB Left	A	A		
Thru			A		Thru		A	A	
Right			A		Right		A	A	
Peds			X		Peds		X	X	
WB Left	A	A			SB Left	A			
Thru		A	A		Thru			A	
Right		A	A		Right			A	
Peds		X	X		Peds			X	
NB Right					EB Right				
SB Right					WB Right				
Green	11.4	5.5	34.4			11.5	8.4	35.1	
Yellow	4.0	4.3	4.3			4.0	4.5	4.5	
All Red	1.0	1.0	2.0			1.0	2.0	2.0	

Cycle Length: 140.9 secs

Intersection Performance Summary

Appr/ Lane Grp	Lane Group Capacity	Adj Sat Flow Rate (s)	Ratios v/c	Ratios g/C	Lane Group Delay	Lane Group LOS	Approach Delay	Approach LOS
Eastbound								
L	284	3505	0.70	0.08	70.8	E		
T	883	3618	0.86	0.24	59.2	E	59.3	E
R	394	1615	0.43	0.24	45.7	D		
Westbound								
L	545	3505	0.96	0.16	87.2	F		
T	1161	3618	0.60	0.32	41.2	D	59.3	E
R	518	1615	0.14	0.32	34.2	C		
Northbound								
L	319	1805	1.12	0.18	143.4	F		
T	1284	3618	0.80	0.35	44.5	D	93.7	F
R	573	1615	1.18	0.35	142.0	F		
Southbound								
L	286	3505	0.74	0.08	72.9	E		
T	901	3618	0.70	0.25	50.6	D	55.2	E
R	402	1615	0.16	0.25	41.5	D		

Intersection Delay = 71.7 (sec/veh) Intersection LOS = E

HCS+: Signalized Intersections Release 5.2

Analyst:
Agency: Gresham Smith and Partners
Date: 1/23/2006
Period: A.M
Project ID: Optimized
E/W St: Whittington Pkwy

Inter.: Whittington Pkwy / Hurstbourne
Area Type: All other areas
Jurisd:
Year : 2012

N/S St: Hurstbourne Pkwy

SIGNALIZED INTERSECTION SUMMARY

	Eastbound			Westbound			Northbound			Southbound		
	L	T	R	L	T	R	L	T	R	L	T	R
No. Lanes	0	1	1	0	1	1	2	3	0	1	3	1
LGConfig		LT	R		LT	R	L	TR		L	T	R
Volume	46	15	184	31	15	26	266	1308	15	5	949	236
Lane Width		12.0	12.0		12.0	12.0	12.0	12.0		12.0	12.0	12.0
RTOR Vol			180			23			10			83

Duration 0.25 Area Type: All other areas

Signal Operations

Phase Combination	1	2	3	4		5	6	7	8
EB Left	A				NB Left	A	A		
Thru	A				Thru		A	A	
Right	A				Right		A	A	
Peds	X				Peds				
WB Left	A				SB Left	A			
Thru	A				Thru			A	
Right	A				Right			A	
Peds					Peds				
NB Right					EB Right				
SB Right					WB Right				
Green	22.1					4.2	19.2	110.5	
Yellow	4.5					4.5	4.5	4.5	
All Red	1.5					1.5	1.5	1.5	

Cycle Length: 180.0 secs

Intersection Performance Summary

Appr/ Lane Grp	Lane Group Capacity	Adj Sat Flow Rate (s)	Ratios v/c	Ratios g/C	Lane Group Delay	Lane Group LOS	Approach Delay	Approach LOS
Eastbound								
LT	174	1419	0.39	0.12	74.2	E	73.9	E
R	198	1615	0.02	0.12	69.5	E		
Westbound								
LT	176	1434	0.29	0.12	72.7	E	72.5	E
R	198	1615	0.02	0.12	69.4	E		
Northbound								
L	572	3505	0.52	0.16	69.6	E		
TR	3899	5172	0.37	0.75	7.7	A	18.1	B
Southbound								
L	42	1805	0.14	0.02	87.7	F		
T	3177	5176	0.33	0.61	16.9	B	17.0	B
R	991	1615	0.17	0.61	15.1	B		

Intersection Delay = 19.9 (sec/veh) Intersection LOS = B

HCS+: Signalized Intersections Release 5.2

Analyst: Tony Lewis
Agency: Gresham Smith and Partners
Date: 1/23/2006
Period: P.M
Project ID: Optimized
E/W St: Whittington Pkwy

Inter.: Whittington Pkwy / Hurstbourne
Area Type: All other areas
Jurisd:
Year : 2012

N/S St: Hurstbourne Pkwy

SIGNALIZED INTERSECTION SUMMARY

	Eastbound			Westbound			Northbound			Southbound		
	L	T	R	L	T	R	L	T	R	L	T	R
No. Lanes	0	1	1	0	1	1	2	3	0	1	3	1
LGConfig		LT	R		LT	R	L	TR		L	T	R
Volume	302	20	461	46	26	20	179	1927	31	15	1431	133
Lane Width		12.0	12.0		12.0	12.0	12.0	12.0		12.0	12.0	12.0
RTOR Vol			0			14			18			105

Duration 0.25 Area Type: All other areas

Signal Operations

Phase Combination	1	2	3	4		5	6	7	8
EB Left	A				NB Left	A	A		
Thru	A				Thru		A	A	
Right	A				Right		A	A	
Peds	X				Peds				
WB Left	A				SB Left	A			
Thru	A				Thru			A	
Right	A				Right			A	
Peds					Peds				
NB Right					EB Right				
SB Right					WB Right				
Green	62.1					4.2	4.0	85.7	
Yellow	4.5					4.5	4.5	4.5	
All Red	1.5					1.5	1.5	1.5	

Cycle Length: 180.0 secs

Intersection Performance Summary

Appr/ Lane Grp	Lane Group Capacity	Adj Sat Flow Rate (s)	Ratios v/c	Ratios g/C	Lane Group Delay	Lane Group LOS	Approach Delay	Approach LOS
Eastbound								
LT	447	1295	0.80	0.34	63.4	E	71.4	E
R	557	1615	0.92	0.34	77.1	E		
Westbound								
LT	304	882	0.26	0.34	42.9	D	42.6	D
R	557	1615	0.01	0.34	38.8	D		
Northbound								
L	277	3505	0.72	0.08	81.8	F		
TR	2749	5171	0.78	0.53	34.0	C	38.0	D
Southbound								
L	42	1805	0.40	0.02	87.2	F		
T	2464	5176	0.65	0.48	35.7	D	36.0	D
R	769	1615	0.04	0.48	25.2	C		

Intersection Delay = 43.3 (sec/veh) Intersection LOS = D

HCS+: Unsignalized Intersections Release 5.2

TWO-WAY STOP CONTROL SUMMARY

Analyst:
Agency/Co.: Gresham Smith and Partners
Date Performed: 1/27/2006
Analysis Time Period: A.M.
Intersection: Shelbyville/ Whipps Mill Rd
Jurisdiction:
Units: U. S. Customary
Analysis Year: 2012
Project ID:
East/West Street: Shelbyville Rd.
North/South Street: Whipps Mill Rd
Intersection Orientation: EW Study period (hrs): 0.25

Vehicle Volumes and Adjustments

Major Street: Approach	Eastbound			Westbound		
Movement	1	2	3	4	5	6
	L	T	R	L	T	R
Volume	420	2180	60	10	2180	10
Peak-Hour Factor, PHF	1.00	1.00	1.00	1.00	1.00	1.00
Hourly Flow Rate, HFR	420	2180	60	10	2180	10
Percent Heavy Vehicles	0	--	--	0	--	--
Median Type/Storage	TWLTL			/ 1		
RT Channelized?					No	
Lanes	1	2	0	1	2	1
Configuration	L	T	TR	L	T	R
Upstream Signal?		Yes			Yes	

Minor Street: Approach	Northbound			Southbound		
Movement	7	8	9	10	11	12
	L	T	R	L	T	R
Volume	10	10	30	10	10	420
Peak Hour Factor, PHF	1.00	1.00	1.00	1.00	1.00	1.00
Hourly Flow Rate, HFR	10	10	30	10	10	420
Percent Heavy Vehicles	0	0	0	0	0	0
Percent Grade (%)		0			0	
Flared Approach: Exists?/Storage			No /			/
Lanes	0	1	0	0	1	1
Configuration		LTR		LT	R	

Delay, Queue Length, and Level of Service

Approach	EB	WB	Northbound			Southbound		
Movement	1	4	7	8	9	10	11	12
Lane Config	L	L		LTR		LT		R
v (vph)	420	10		50		20		420
C(m) (vph)	284	334						441
v/c	1.48	0.03						0.95
95% queue length	23.66	0.09						11.31
Control Delay	267.0	16.1						62.6
LOS	F	C						F
Approach Delay								
Approach LOS								

HCS+: Unsignalized Intersections Release 5.2

TWO-WAY STOP CONTROL SUMMARY

Analyst:
Agency/Co.: Gresham Smith and Partners
Date Performed: 1/27/2006
Analysis Time Period: P.M
Intersection: Shelbyville/ Whipps Mill Rd
Jurisdiction:
Units: U. S. Customary
Analysis Year: 2012
Project ID:
East/West Street: Shelbyville Rd.
North/South Street: Whipps Mill Rd
Intersection Orientation: EW Study period (hrs): 0.25

Vehicle Volumes and Adjustments

Major Street: Approach	Eastbound			Westbound		
Movement	1	2	3	4	5	6
	L	T	R	L	T	R
Volume	330	1790	30	10	2070	20
Peak-Hour Factor, PHF	1.00	1.00	1.00	1.00	1.00	1.00
Hourly Flow Rate, HFR	330	1790	30	10	2070	20
Percent Heavy Vehicles	0	--	--	0	--	--
Median Type/Storage	TWLTL			/ 1		
RT Channelized?					No	
Lanes	1	2	0	1	2	1
Configuration	L	T	TR	L	T	R
Upstream Signal?		Yes			Yes	

Minor Street: Approach	Northbound			Southbound		
Movement	7	8	9	10	11	12
	L	T	R	L	T	R
Volume	10	10	10	10	10	360
Peak Hour Factor, PHF	1.00	1.00	1.00	1.00	1.00	1.00
Hourly Flow Rate, HFR	10	10	10	10	10	360
Percent Heavy Vehicles	0	0	0	0	0	0
Percent Grade (%)		0			0	
Flared Approach: Exists?/Storage			No /			/
Lanes	0	1	0	0	1	1
Configuration		LTR		LT	R	

Delay, Queue Length, and Level of Service

Approach	EB	WB	Northbound			Southbound		
Movement	1	4	7	8	9	10	11	12
Lane Config	L	L		LTR		LT		R
v (vph)	330	10		30		20		360
C(m) (vph)	334							467
v/c	0.99							0.77
95% queue length	10.88							6.72
Control Delay	82.4							34.2
LOS	F							D
Approach Delay								
Approach LOS								

HCS+: Unsignalized Intersections Release 5.2

TWO-WAY STOP CONTROL SUMMARY

Analyst:
Agency/Co.: Gresham Smith and Partners
Date Performed: 1/24/2006
Analysis Time Period: A.M.
Intersection: Shelbyville Rd/ Blue Ridge Ma
Jurisdiction:
Units: U. S. Customary
Analysis Year: 2012
Project ID:
East/West Street: Shelbyville Rd
North/South Street: Blue Ridge Manor
Intersection Orientation: EW Study period (hrs): 0.25

Vehicle Volumes and Adjustments

Major Street: Approach	Eastbound			Westbound		
Movement	1	2	3	4	5	6
	L	T	R	L	T	R
Volume	0	813	8	7	1513	0
Peak-Hour Factor, PHF	1.00	1.00	1.00	1.00	1.00	1.00
Hourly Flow Rate, HFR	0	813	8	7	1513	0
Percent Heavy Vehicles	0	--	--	0	--	--
Median Type/Storage	TWLTL			/ 1		
RT Channelized?			No			
Lanes	1	2	1	1	2	0
Configuration	L	T	R	L	T	TR
Upstream Signal?		Yes			Yes	

Minor Street: Approach	Northbound			Southbound		
Movement	7	8	9	10	11	12
	L	T	R	L	T	R
Volume	17		17			
Peak Hour Factor, PHF	1.00		1.00			
Hourly Flow Rate, HFR	17		17			
Percent Heavy Vehicles	0		0			
Percent Grade (%)		0			0	
Flared Approach: Exists?/Storage			/			/
Lanes	1		1			
Configuration	L		R			

Delay, Queue Length, and Level of Service

Approach	EB	WB	Northbound			Southbound		
Movement	1	4	7	8	9	10	11	12
Lane Config	L	L	L		R			
v (vph)	0	7	17		17			
C(m) (vph)	520	991	382		906			
v/c	0.00	0.01	0.04		0.02			
95% queue length	0.00	0.02	0.14		0.06			
Control Delay	11.9	8.7	14.9		9.0			
LOS	B	A	B		A			
Approach Delay				12.0				
Approach LOS				B				

HCS+: Unsignalized Intersections Release 5.2

TWO-WAY STOP CONTROL SUMMARY

Analyst:
Agency/Co.: Gresham Smith and Partners
Date Performed: 1/24/2006
Analysis Time Period: P.M.
Intersection: Shelbyville Rd/ Blue Ridge Ma
Jurisdiction:
Units: U. S. Customary
Analysis Year: 2012
Project ID:
East/West Street: Shelbyville Rd
North/South Street: Blue Ridge Manor
Intersection Orientation: EW Study period (hrs): 0.25

Vehicle Volumes and Adjustments

Major Street: Approach	Eastbound			Westbound		
Movement	1	2	3	4	5	6
	L	T	R	L	T	R
Volume	0	1677	23	27	1203	0
Peak-Hour Factor, PHF	1.00	1.00	1.00	1.00	1.00	1.00
Hourly Flow Rate, HFR	0	1677	23	27	1203	0
Percent Heavy Vehicles	0	--	--	0	--	--
Median Type/Storage	TWLTL			/ 1		
RT Channelized?			No			
Lanes	1	2	1	1	2	0
Configuration	L	T	R	L	T	TR
Upstream Signal?		Yes			Yes	

Minor Street: Approach	Northbound			Southbound		
Movement	7	8	9	10	11	12
	L	T	R	L	T	R
Volume	11		23			
Peak Hour Factor, PHF	1.00		1.00			
Hourly Flow Rate, HFR	11		23			
Percent Heavy Vehicles	0		0			
Percent Grade (%)		0			0	
Flared Approach: Exists?/Storage			/			/
Lanes	1		1			
Configuration	L		R			

Delay, Queue Length, and Level of Service

Approach	EB	WB	Northbound			Southbound		
Movement	1	4	7	8	9	10	11	12
Lane Config	L	L	L		R			
v (vph)	0	27	11		23			
C(m) (vph)	716	379	114		315			
v/c	0.00	0.07	0.10		0.07			
95% queue length	0.00	0.23	0.31		0.23			
Control Delay	10.0+	15.2	39.9		17.3			
LOS	B	C	E		C			
Approach Delay				24.6				
Approach LOS				C				

HCS+: Unsignalized Intersections Release 5.2

TWO-WAY STOP CONTROL SUMMARY

Analyst:
Agency/Co.: Gresham Smith and Partners
Date Performed: 1/23/2006
Analysis Time Period: A.M
Intersection: Tamarisk Pkwy / Hurstbourne
Jurisdiction:
Units: U. S. Customary
Analysis Year: 2012
Project ID:
East/West Street: Tamarisk Pkwy
North/South Street: Hurstbourne Pkwy
Intersection Orientation: NS Study period (hrs): 0.25

Vehicle Volumes and Adjustments

Major Street: Approach	Northbound			Southbound		
Movement	1	2	3	4	5	6
	L	T	R	L	T	R
Volume	2	948	10	9	1380	3
Peak-Hour Factor, PHF	1.00	1.00	1.00	1.00	1.00	1.00
Hourly Flow Rate, HFR	2	948	10	9	1380	3
Percent Heavy Vehicles	0	--	--	0	--	--
Median Type/Storage	Raised curb / 1					
RT Channelized?			No			
Lanes	1	2	1	1	2	0
Configuration	L	T	R	L	T	TR
Upstream Signal?		Yes			Yes	

Minor Street: Approach	Westbound			Eastbound		
Movement	7	8	9	10	11	12
	L	T	R	L	T	R
Volume	70	0	46	1	0	0
Peak Hour Factor, PHF	1.00	1.00	1.00	1.00	1.00	1.00
Hourly Flow Rate, HFR	70	0	46	1	0	0
Percent Heavy Vehicles	0	0	0	0	0	0
Percent Grade (%)		0			0	
Flared Approach: Exists?/Storage			No /			Yes /1
Lanes	1	1	0	0	1	0
Configuration	L		TR		LTR	

Delay, Queue Length, and Level of Service

Approach	NB	SB	Westbound			Eastbound		
Movement	1	4	7	8	9	10	11	12
Lane Config	L	L	L		TR		LTR	
v (vph)	2	9	70		46		1	
C(m) (vph)	502	1037	267		780			
v/c	0.00	0.01	0.26		0.06			
95% queue length	0.01	0.03	1.02		0.19			
Control Delay	12.2	8.5	23.2		9.9		33.6	
LOS	B	A	C		A			
Approach Delay				17.9			33.6	
Approach LOS				C			D	

HCS+: Unsignalized Intersections Release 5.2

TWO-WAY STOP CONTROL SUMMARY

Analyst:
Agency/Co.: Gresham Smith and Partners
Date Performed: 1/23/2006
Analysis Time Period: P.M
Intersection: Tamarisk Pkwy / Hurstbourne
Jurisdiction:
Units: U. S. Customary
Analysis Year: 2012
Project ID:
East/West Street: Tamarisk Pkwy
North/South Street: Hurstbourne Pkwy
Intersection Orientation: NS Study period (hrs): 0.25

Vehicle Volumes and Adjustments

Major Street: Approach	Northbound			Southbound		
Movement	1	2	3	4	5	6
	L	T	R	L	T	R
Volume	6	1240	58	56	1025	0
Peak-Hour Factor, PHF	1.00	1.00	1.00	1.00	1.00	1.00
Hourly Flow Rate, HFR	6	1240	58	56	1025	0
Percent Heavy Vehicles	0	--	--	0	--	--
Median Type/Storage	Raised curb / 1					
RT Channelized?			Yes			
Lanes	1	2	1	1	2	0
Configuration	L	T	R	L	T	TR
Upstream Signal?		Yes			Yes	

Minor Street: Approach	Westbound			Eastbound		
Movement	7	8	9	10	11	12
	L	T	R	L	T	R
Volume	27	0	42	4	0	14
Peak Hour Factor, PHF	1.00	1.00	1.00	1.00	1.00	1.00
Hourly Flow Rate, HFR	27	0	42	4	0	14
Percent Heavy Vehicles	0	0	0	0	0	0
Percent Grade (%)		0			0	
Flared Approach: Exists?/Storage			No /			Yes /1
Lanes	1	1	0	0	1	0
Configuration	L		TR		LTR	

Delay, Queue Length, and Level of Service

Approach	NB	SB	Westbound			Eastbound		
Movement	1	4	7	8	9	10	11	12
Lane Config	L	L	L		TR		LTR	
v (vph)	6	56	27		42		18	
C(m) (vph)	685	761	203		763		658	
v/c	0.01	0.07	0.13		0.06		0.03	
95% queue length	0.03	0.24	0.45		0.17		0.08	
Control Delay	10.3	10.1	25.4		10.0-		15.6	
LOS	B	B	D		A		C	
Approach Delay				16.0			15.6	
Approach LOS				C			C	

HCS+: Signalized Intersections Release 5.2

Analyst:
Agency: Gresham Smith and Partners
Date: 1/23/2006
Period: A.M
Project ID: Optimized
E/W St: Linn Station

Inter.: Linn Station/Hurstbourne Pkwy
Area Type: All other areas
Jurisd:
Year : 2020

N/S St: Hurstbourne Pkwy

SIGNALIZED INTERSECTION SUMMARY

	Eastbound			Westbound			Northbound			Southbound		
	L	T	R	L	T	R	L	T	R	L	T	R
No. Lanes	1	1	1	2	1	1	2	3	1	2	3	1
LGConfig	L	LT	R	L	T	R	L	T	R	L	T	R
Volume	90	140	560	770	70	90	540	1690	1270	180	1200	90
Lane Width	12.0	12.0	12.0	12.0	12.0	12.0	12.0	12.0	12.0	12.0	12.0	12.0
RTOR Vol			330			80			445			55

Duration 0.25 Area Type: All other areas

Signal Operations

Phase Combination	1	2	3	4	5	6	7	8
EB Left	A				A	A		
Thru	A					A	A	
Right	A					A	A	
Peds	X					X	X	
WB Left		A			A			
Thru		A					A	
Right		A					A	
Peds		X					X	
NB Right								
SB Right								
Green	19.3	31.0			9.4	22.9	62.4	
Yellow	5.0	5.0			5.0	5.0	5.0	
All Red	2.0	2.0			2.0	2.0	2.0	

Cycle Length: 180.0 secs

Intersection Performance Summary

Appr/ Lane Grp	Lane Group Capacity	Adj Sat Flow Rate (s)	Ratios v/c	Ratios g/C	Lane Group Delay	Lane Group LOS	Approach Delay	Approach LOS
Eastbound								
L	194	1805	0.52	0.11	78.3	E		
LT	204	1900	0.76	0.11	93.9	F	206.2	F
R	173	1615	1.48	0.11	324.6	F		
Westbound								
L	604	3505	1.42	0.17	271.9	F		
T	327	1900	0.24	0.17	64.7	E	252.3	F
R	278	1615	0.04	0.17	62.2	E		
Northbound								
L	765	3505	0.78	0.22	66.9	E		
T	2654	5176	0.71	0.51	33.6	C	55.8	E
R	828	1615	1.11	0.51	94.2	F		
Southbound								
L	183	3505	1.09	0.05	178.8	F		
T	1794	5176	0.74	0.35	53.5	D	69.1	E
R	560	1615	0.07	0.35	39.4	D		

Intersection Delay = 100.0 (sec/veh) Intersection LOS = F

HCS+: Signalized Intersections Release 5.2

Analyst:
Agency: Gresham Smith and Partners
Date: 1/23/2006
Period: P.M
Project ID: Optimized
E/W St: Linn Station

Inter.: Linn Station/Hurstbourne Pkwy
Area Type: All other areas
Jurisd:
Year : 2020

N/S St: Hurstbourne Pkwy

SIGNALIZED INTERSECTION SUMMARY

	Eastbound			Westbound			Northbound			Southbound		
	L	T	R	L	T	R	L	T	R	L	T	R
No. Lanes	1	1	1	2	1	1	2	3	1	2	3	1
LGConfig	L	LT	R	L	T	R	L	T	R	L	T	R
Volume	100	210	620	1440	320	220	570	1780	1080	200	1690	60
Lane Width	12.0	12.0	12.0	12.0	12.0	12.0	12.0	12.0	12.0	12.0	12.0	12.0
RTOR Vol			345			160			720			26

Duration 0.25 Area Type: All other areas

Signal Operations

Phase Combination	1	2	3	4	5	6	7	8
EB Left	A				A	A		
Thru	A					A	A	
Right	A					A	A	
Peds	X					X	X	
WB Left		A			A			
Thru		A					A	
Right		A					A	
Peds		X					X	
NB Right								
SB Right								
Green	20.3	44.9			8.3	11.2	60.3	
Yellow	5.0	5.0			5.0	5.0	5.0	
All Red	2.0	2.0			2.0	2.0	2.0	

Cycle Length: 180.0 secs

Intersection Performance Summary

Appr/ Lane Grp	Lane Group Capacity	Adj Sat Flow Rate (s)	Ratios v/c	Ratios g/C	Lane Group Delay	Lane Group LOS	Approach Delay	Approach LOS
Eastbound								
L	204	1805	0.54	0.11	78.5	E		
LT	214	1900	1.09	0.11	167.1	F	265.9	F
R	182	1615	1.68	0.11	409.2	F		
Westbound								
L	874	3505	1.83	0.25	445.8	F		
T	474	1900	0.75	0.25	69.0	E	366.5	F
R	403	1615	0.17	0.25	53.1	D		
Northbound								
L	516	3505	1.23	0.15	195.1	F		
T	2257	5176	0.88	0.44	50.6	D	79.4	E
R	704	1615	0.57	0.44	39.1	D		
Southbound								
L	162	3505	1.37	0.05	286.6	F		
T	1734	5176	1.08	0.34	107.8	F	125.2	F
R	541	1615	0.07	0.34	40.8	D		

Intersection Delay = 181.7 (sec/veh) Intersection LOS = F

HCS+: Signalized Intersections Release 5.2

Analyst:
Agency: Gresham Smith and Partners
Date: 1/23/2006
Period: A.M
Project ID: Optimized 6 Lanes
E/W St: Shelbyville Rd

Inter.: Shelbyville Rd/ 8 Mile Center
Area Type: All other areas
Jurisd:
Year : 2020
N/S St: 8 Mile Center

SIGNALIZED INTERSECTION SUMMARY

	Eastbound			Westbound			Northbound			Southbound		
	L	T	R	L	T	R	L	T	R	L	T	R
No. Lanes	1	3	0	1	3	1	0	1	0	1	1	0
LGConfig	L	TR		L	T	R		LTR		L	TR	
Volume	28	2815	6	6	2781	9	7	1	3	12	0	25
Lane Width	12.0	12.0		12.0	12.0	12.0		12.0		12.0	12.0	
RTOR Vol			0			0			0			0

Duration 0.25 Area Type: All other areas

Signal Operations

Phase Combination	1	2	3	4		5	6	7	8
EB Left	A				NB Left	A			
Thru		A			Thru	A			
Right		A			Right	A			
Peds					Peds				
WB Left	A				SB Left	A			
Thru		A			Thru	A			
Right		A			Right	A			
Peds					Peds	X			
NB Right					EB Right				
SB Right					WB Right				
Green	5.0	86.0			5.0				
Yellow	4.0	4.0			4.0				
All Red	0.0	1.0			1.0				

Cycle Length: 110.0 secs

Intersection Performance Summary

Appr/ Lane Grp	Lane Group Capacity	Adj Sat Flow Rate (s)	Ratios v/c	Ratios g/C	Lane Group Delay	Lane Group LOS	Approach Delay	Approach LOS
Eastbound								
L	82	1805	0.38	0.05	51.3	D		
TR	4045	5174	0.78	0.78	6.7	A	7.2	A
Westbound								
L	82	1805	0.09	0.05	50.8	D		
T	4047	5176	0.76	0.78	7.4	A	7.5	A
R	1263	1615	0.01	0.78	2.6	A		
Northbound								
LTR	65	1436	0.18	0.05	51.9	D	51.9	D
Southbound								
L	69	1520	0.19	0.05	51.9	D		
TR	73	1615	0.38	0.05	54.3	D	53.6	D

Intersection Delay = 7.7 (sec/veh) Intersection LOS = A

HCS+: Signalized Intersections Release 5.2

Analyst:
Agency: Gresham Smith and Partners
Date: 1/23/2006
Period: P.M
Project ID: Optimization 6 Lanes
E/W St: Shelbyville Rd

Inter.: Shelbyville Rd/ 8 Mile Center
Area Type: All other areas
Jurisd:
Year : 2020
N/S St: 8 Mile Center

SIGNALIZED INTERSECTION SUMMARY

	Eastbound			Westbound			Northbound			Southbound		
	L	T	R	L	T	R	L	T	R	L	T	R
No. Lanes	1	3	0	1	3	1	0	1	0	1	1	0
LGConfig	L	TR		L	T	R		LTR		L	TR	
Volume	23	2769	0	2	2932	8	6	0	2	16	1	39
Lane Width	12.0	12.0		12.0	12.0	12.0		12.0		12.0	12.0	
RTOR Vol			0			0			0			0

Duration 0.25 Area Type: All other areas

Signal Operations

Phase Combination	1	2	3	4		5	6	7	8
EB Left	A				NB Left	A			
Thru		A			Thru	A			
Right		A			Right	A			
Peds					Peds				
WB Left	A				SB Left	A			
Thru		A			Thru	A			
Right		A			Right	A			
Peds					Peds	X			
NB Right					EB Right				
SB Right					WB Right				
Green	5.0	135.7			5.3				
Yellow	4.0	4.0			4.0				
All Red	0.0	1.0			1.0				

Cycle Length: 160.0 secs

Intersection Performance Summary

Appr/ Lane Grp	Lane Group Capacity	Adj Sat Flow Rate (s)	Ratios v/c	Ratios g/C	Lane Group Delay	Lane Group LOS	Approach Delay	Approach LOS
Eastbound								
L	56	1805	0.46	0.03	76.7	E		
TR	4390	5176	0.70	0.85	4.6	A	5.2	A
Westbound								
L	56	1805	0.04	0.03	75.4	E		
T	4390	5176	0.74	0.85	5.7	A	5.7	A
R	1370	1615	0.01	0.85	1.9	A		
Northbound								
LTR	41	1236	0.22	0.03	78.0	E	78.0	E
Southbound								
L	48	1434	0.38	0.03	80.6	F		
TR	54	1621	0.81	0.03	137.3	F	120.8	F

Intersection Delay = 6.7 (sec/veh) Intersection LOS = A

HCS+: Signalized Intersections Release 5.2

Analyst:
Agency: Gresham Smith and Partners
Date: 1/23/2006
Period: A.M
Project ID: Optimized 6 Lanes
E/W St: Shelbyville Rd

Inter.: Shelbyville Rd/ Christian Way
Area Type: All other areas
Jurisd:
Year : 2020
N/S St: Christian Way

SIGNALIZED INTERSECTION SUMMARY

	Eastbound			Westbound			Northbound			Southbound		
	L	T	R	L	T	R	L	T	R	L	T	R
No. Lanes	1	3	1	1	3	0	1	1	1	0	1	0
LGConfig	L	T	R	L	TR		L	LT	R		LTR	
Volume	10	2580	80	50	2550	10	150	10	40	10	10	10
Lane Width	12.0	12.0	12.0	12.0	12.0		12.0	12.0	12.0		12.0	
RTOR Vol			22			0			37			9

Duration 0.25 Area Type: All other areas

Signal Operations

Phase Combination	1	2	3	4		5	6	7	8
EB Left	A	A			NB Left	A			
Thru		A			Thru	A			
Right		A			Right	A			
Peds					Peds	X			
WB Left	A				SB Left	A			
Thru	A	A			Thru	A			
Right	A	A			Right	A			
Peds					Peds				
NB Right					EB Right				
SB Right					WB Right				
Green	6.0	75.0				15.0			
Yellow	4.0	4.0				4.0			
All Red	0.0	1.0				1.0			

Cycle Length: 110.0 secs

Intersection Performance Summary

Appr/ Lane Grp	Lane Group Capacity	Adj Sat Flow Rate (s)	Ratios v/c	Ratios g/C	Lane Group Delay	Lane Group LOS	Approach Delay	Approach LOS
Eastbound								
L	69	89	0.16	0.77	4.3	A		
T	3529	5176	0.81	0.68	14.0	B	13.8	B
R	1101	1615	0.06	0.68	5.8	A		
Westbound								
L	98	1805	0.57	0.05	58.5	E		
TR	3997	5173	0.71	0.77	6.9	A	7.9	A
Northbound								
L	192	1410	0.87	0.14	78.7	E		
LT	259	1900	0.04	0.14	41.3	D	75.8	E
R	220	1615	0.01	0.14	41.1	D		
Southbound								
LTR	231	1691	0.10	0.14	41.8	D	41.8	D

Intersection Delay = 12.9 (sec/veh) Intersection LOS = B

HCS+: Signalized Intersections Release 5.2

Analyst:
Agency: Gresham Smith and Partners
Date: 1/23/2006
Period: P.M
Project ID: Optimized 6 Lanes
E/W St: Shelbyville Rd

Inter.: Shelbyville Rd/ Christian Way
Area Type: All other areas
Jurisd:
Year : 2020
N/S St: Christian Way

SIGNALIZED INTERSECTION SUMMARY

	Eastbound			Westbound			Northbound			Southbound		
	L	T	R	L	T	R	L	T	R	L	T	R
No. Lanes	1	3	1	1	3	0	1	1	1	0	1	0
LGConfig	L	T	R	L	TR		L	LT	R		LTR	
Volume	10	2800	280	230	2880	10	350	10	280	20	10	10
Lane Width	12.0	12.0	12.0	12.0	12.0		12.0	12.0	12.0		12.0	
RTOR Vol			87			0			185			8

Duration 0.25 Area Type: All other areas

Signal Operations

Phase Combination	1	2	3	4		5	6	7	8
EB Left	A	A			NB Left	A			
Thru		A			Thru	A			
Right		A			Right	A			
Peds		X			Peds	X			
WB Left	A				SB Left	A			
Thru	A	A			Thru	A			
Right	A	A			Right	A			
Peds					Peds				
NB Right					EB Right				
SB Right					WB Right				
Green	12.6	105.9				27.5			
Yellow	4.0	4.0				4.0			
All Red	0.0	1.0				1.0			

Cycle Length: 160.0 secs

Intersection Performance Summary

Appr/ Lane Grp	Lane Group Capacity	Adj Sat Flow Rate (s)	Ratios v/c	Ratios g/C	Lane Group Delay	Lane Group LOS	Approach Delay	Approach LOS
Eastbound								
L	47	62	0.23	0.77	7.9	A		
T	3426	5176	0.91	0.66	27.0	C	25.9	C
R	1069	1615	0.20	0.66	10.6	B		
Westbound								
L	142	1805	1.80	0.08	461.5	F		
TR	3961	5173	0.81	0.77	12.9	B	46.1	D
Northbound								
L	242	1407	1.61	0.17	358.0	F		
LT	327	1900	0.03	0.17	55.2	E	288.9	F
R	278	1615	0.38	0.17	59.6	E		
Southbound								
LTR	275	1602	0.13	0.17	56.3	E	56.3	E

Intersection Delay = 53.7 (sec/veh) Intersection LOS = D

HCS+: Signalized Intersections Release 5.2

Analyst:
Agency: Gresham Smith and Partners
Date: 1/23/2006
Period: A.M
Project ID: Estimated 6 Lanes
E/W St: Shelbyville Rd

Inter.: Shelbyville Rd/ Dorsey Ln
Area Type: All other areas
Jurisd:
Year : 2020

N/S St: Dorsey Ln

SIGNALIZED INTERSECTION SUMMARY

	Eastbound			Westbound			Northbound			Southbound		
	L	T	R	L	T	R	L	T	R	L	T	R
No. Lanes	1	3	1	1	3	0	1	1	0	1	1	1
LGConfig	L	T	R	L	TR		L	TR		L	T	R
Volume	110	720	50	10	1200	420	10	10	10	410	40	430
Lane Width	12.0	12.0	12.0	12.0	12.0		12.0	12.0		12.0	12.0	12.0
RTOR Vol			22			23			7			153

Duration 0.25 Area Type: All other areas

Signal Operations

Phase Combination	1	2	3	4		5	6	7	8
EB Left	A	A			NB Left	A			
Thru	A	A			Thru	A			
Right	A	A			Right	A			
Peds	X	X			Peds	X			
WB Left		A			SB Left	A			
Thru		A			Thru	A			
Right		A			Right	A			
Peds		X			Peds	X			
NB Right					EB Right				
SB Right					WB Right				
Green	10.0	44.2			30.0				
Yellow	4.0	4.3			4.0				
All Red	0.0	1.0			1.0				

Cycle Length: 98.5 secs

Intersection Performance Summary

Appr/ Lane Grp	Lane Group Capacity	Adj Sat Flow Rate (s)	Ratios v/c	Ratios g/C	Lane Group Delay	Lane Group LOS	Approach Delay	Approach LOS
Eastbound								
L	260	1805	0.47	0.59	16.9	B		
T	3058	5176	0.26	0.59	9.8	A	10.7	B
R	954	1615	0.03	0.59	8.4	A		
Westbound								
L	287	640	0.04	0.45	15.3	B		
TR	2236	4983	0.79	0.45	25.3	C	25.2	C
Northbound								
L	422	1384	0.03	0.30	24.0	C		
TR	560	1839	0.03	0.30	24.0	C	24.0	C
Southbound								
L	433	1422	1.05	0.30	92.2	F		
T	579	1900	0.08	0.30	24.4	C	65.5	E
R	492	1615	0.63	0.30	31.9	C		

Intersection Delay = 30.4 (sec/veh) Intersection LOS = C

HCS+: Signalized Intersections Release 5.2

Analyst:
Agency: Gresham Smith and Partners
Date: 1/23/2006
Period: P.M
Project ID: Estimated 6 Lanes
E/W St: Shelbyville Rd

Inter.: Shelbyville Rd/ Dorsey Ln
Area Type: All other areas
Jurisd:
Year : 2020

N/S St: Dorsey Ln

SIGNALIZED INTERSECTION SUMMARY

	Eastbound			Westbound			Northbound			Southbound		
	L	T	R	L	T	R	L	T	R	L	T	R
No. Lanes	1	3	1	1	3	0	1	1	0	1	1	1
LGConfig	L	T	R	L	TR		L	TR		L	T	R
Volume	350	1380	40	40	1120	460	60	40	40	410	40	190
Lane Width	12.0	12.0	12.0	12.0	12.0		12.0	12.0		12.0	12.0	12.0
RTOR Vol			8			22			27			154

Duration 0.25 Area Type: All other areas

Signal Operations

Phase Combination	1	2	3	4		5	6	7	8
EB Left	A	A			NB Left	A			
Thru	A	A			Thru	A			
Right	A	A			Right	A			
Peds	X	X			Peds	X			
WB Left		A			SB Left	A			
Thru		A			Thru	A			
Right		A			Right	A			
Peds		X			Peds	X			
NB Right					EB Right				
SB Right					WB Right				
Green	30.0	52.9			30.0				
Yellow	4.0	4.3			4.0				
All Red	0.0	1.0			1.0				

Cycle Length: 127.2 secs

Intersection Performance Summary

Appr/ Lane Grp	Lane Group Capacity	Adj Sat Flow Rate (s)	Ratios v/c	Ratios g/C	Lane Group Delay	Lane Group LOS	Approach Delay	Approach LOS
Eastbound								
L	486	1805	0.80	0.68	45.4	D		
T	3536	5176	0.43	0.68	9.2	A	16.3	B
R	1103	1615	0.03	0.68	6.5	A		
Westbound								
L	123	296	0.36	0.42	27.3	C		
TR	2062	4957	0.84	0.42	36.6	D	36.4	D
Northbound								
L	326	1384	0.21	0.24	39.3	D		
TR	432	1831	0.13	0.24	38.5	D	38.9	D
Southbound								
L	322	1366	1.42	0.24	253.3	F		
T	448	1900	0.10	0.24	38.1	D	219.8	F
R	381	1615	0.10	0.24	38.2	D		

Intersection Delay = 50.0 (sec/veh) Intersection LOS = D

HCS+: Signalized Intersections Release 5.2

Analyst:
Agency: Gresham Smith and Partners
Date: 1/24/2006
Period: A.M
Project ID: Optimized 6 Lanes
E/W St: Shelbyville Rd

Inter.: Shelbyville Rd./ Hurstbourne
Area Type: All other areas
Jurisd:
Year : 2020
N/S St: Hurstbourne Pkwy

SIGNALIZED INTERSECTION SUMMARY

	Eastbound			Westbound			Northbound			Southbound		
	L	T	R	L	T	R	L	T	R	L	T	R
No. Lanes	2	3	1	2	3	0	2	2	1	2	2	1
LGConfig	L	T	R	L	TR		L	T	R	L	T	R
Volume	410	790	140	370	1170	160	250	1020	170	190	730	550
Lane Width	12.0	12.0	12.0	12.0	12.0		12.0	12.0	12.0	12.0	12.0	12.0
RTOR Vol			51			4			108			254

Duration 0.25 Area Type: All other areas

Signal Operations

Phase Combination	1	2	3	4	5	6	7	8
EB Left	A				NB Left	A		
Thru		A			Thru	A		
Right		A			Right	A		
Peds		X			Peds	X		
WB Left	A				SB Left	A		
Thru		A			Thru	A		
Right		A			Right	A		
Peds		X			Peds	X		
NB Right					EB Right			
SB Right					WB Right			
Green	24.6	59.2			13.6	57.1		
Yellow	5.0	4.0			4.5	5.0		
All Red	2.0	1.5			1.5	2.0		

Cycle Length: 180.0 secs

Intersection Performance Summary

Appr/ Lane Grp	Lane Group Capacity	Adj Sat Flow Rate (s)	Ratios v/c	Ratios g/C	Lane Group Delay	Lane Group LOS	Approach Delay	Approach LOS
Eastbound								
L	479	3505	0.95	0.14	106.4	F		
T	1702	5176	0.52	0.33	49.1	D	66.9	E
R	531	1615	0.19	0.33	43.4	D		
Westbound								
L	479	3505	0.86	0.14	90.4	F		
TR	1672	5084	0.88	0.33	62.9	E	68.9	E
Northbound								
L	265	3505	1.05	0.08	151.9	F		
T	1148	3618	0.99	0.32	84.4	F	95.2	F
R	512	1615	0.13	0.32	44.0	D		
Southbound								
L	265	3505	0.80	0.08	97.3	F		
T	1148	3618	0.71	0.32	56.1	E	62.4	E
R	512	1615	0.64	0.32	55.4	E		

Intersection Delay = 73.3 (sec/veh) Intersection LOS = E

HCS+: Signalized Intersections Release 5.2

Analyst:
Agency: Gresham Smith and Partners
Date: 1/24/2006
Period: P.M
Project ID: Optimized 6 Lanes
E/W St: Shelbyville Rd

Inter.: Shelbyville Rd./ Hurstbourne
Area Type: All other areas
Jurisd:
Year : 2020
N/S St: Hurstbourne Pkwy

SIGNALIZED INTERSECTION SUMMARY

	Eastbound			Westbound			Northbound			Southbound		
	L	T	R	L	T	R	L	T	R	L	T	R
No. Lanes	2	3	1	2	3	0	2	2	1	2	2	1
LGConfig	L	T	R	L	TR		L	T	R	L	T	R
Volume	430	1200	230	490	1060	170	480	1440	440	370	940	360
Lane Width	12.0	12.0	12.0	12.0	12.0		12.0	12.0	12.0	12.0	12.0	12.0
RTOR Vol			55			5			198			248

Duration 0.25 Area Type: All other areas

Signal Operations

Phase Combination	1	2	3	4	5	6	7	8
EB Left	A				NB Left	A		
Thru		A			Thru	A		
Right		A			Right	A		
Peds		X			Peds	X		
WB Left	A				SB Left	A		
Thru		A			Thru	A		
Right		A			Right	A		
Peds		X			Peds	X		
NB Right					EB Right			
SB Right					WB Right			
Green	25.2	47.8			22.5	58.5		
Yellow	5.0	4.5			4.5	5.0		
All Red	2.0	1.5			1.5	2.0		

Cycle Length: 180.0 secs

Intersection Performance Summary

Appr/ Lane Grp	Lane Group Capacity	Adj Sat Flow Rate (s)	Ratios v/c	Ratios g/C	Lane Group Delay	Lane Group LOS	Approach Delay	Approach LOS
Eastbound								
L	491	3505	0.97	0.14	110.8	F		
T	1375	5176	0.97	0.27	82.8	F	86.9	F
R	429	1615	0.45	0.27	55.9	E		
Westbound								
L	491	3505	1.11	0.14	150.9	F		
TR	1347	5071	1.01	0.27	93.2	F	109.7	F
Northbound								
L	438	3505	1.22	0.13	195.6	F		
T	1176	3618	1.36	0.32	228.6	F	201.3	F
R	525	1615	0.51	0.32	50.1	D		
Southbound								
L	438	3505	0.94	0.13	106.2	F		
T	1176	3618	0.89	0.32	66.2	E	74.9	E
R	525	1615	0.24	0.32	44.6	D		

Intersection Delay = 124.8 (sec/veh) Intersection LOS = F

HCS+: Signalized Intersections Release 5.2

Analyst:
Agency: Gresham Smith and Partners
Date: 1/23/2006
Period: A.M
Project ID: Optimized 6 Lanes
E/W St: Shelbyville Rd

Inter.: Shelbyville Rd/ Lyndon Ln
Area Type: All other areas
Jurisd:
Year : 2020

N/S St: Lyndon Ln

SIGNALIZED INTERSECTION SUMMARY

	Eastbound			Westbound			Northbound			Southbound		
	L	T	R	L	T	R	L	T	R	L	T	R
No. Lanes	1	3	0	1	3	1	1	1	0	0	1	0
LGConfig	L	TR		L	T	R	L	TR			LTR	
Volume	70	2390	70	30	2230	100	280	70	40	280	100	70
Lane Width	12.0	12.0		12.0	12.0	12.0	12.0	12.0			12.0	
RTOR Vol			2			10			19			13

Duration 0.25 Area Type: All other areas

Signal Operations

Phase Combination	1	2	3	4		5	6	7	8
EB Left	A				NB Left	A			
Thru		A			Thru	A			
Right		A			Right	A			
Peds		X			Peds	X			
WB Left	A				SB Left	A			
Thru		A			Thru	A			
Right		A			Right	A			
Peds					Peds	X			
NB Right					EB Right				
SB Right					WB Right				
Green	5.0	65.1			24.9				
Yellow	4.0	4.0			4.0				
All Red	1.0	1.0			1.0				

Cycle Length: 110.0 secs

Intersection Performance Summary

Appr/ Lane Grp	Lane Group Capacity	Adj Sat Flow Rate (s)	Ratios v/c	Ratios g/C	Lane Group Delay	Lane Group LOS	Approach Delay	Approach LOS
Eastbound								
L	82	1805	0.95	0.05	135.2	F		
TR	3050	5154	0.90	0.59	23.4	C	26.5	C
Westbound								
L	82	1805	0.40	0.05	54.3	D		
T	3063	5176	0.81	0.59	19.3	B	19.4	B
R	956	1615	0.10	0.59	9.8	A		
Northbound								
L	274	1212	1.14	0.23	138.3	F		
TR	415	1835	0.24	0.23	35.1	D	113.0	F
Southbound								
LTR	266	1175	1.82	0.23	427.5	F	427.5	F

Intersection Delay = 60.0 (sec/veh) Intersection LOS = E

HCS+: Signalized Intersections Release 5.2

Analyst:
Agency: Gresham Smith and Partners
Date: 1/23/2006
Period: P.M
Project ID: Optimized 6 Lanes
E/W St: Shelbyville Rd

Inter.: Shelbyville Rd/ Lyndon Ln
Area Type: All other areas
Jurisd:
Year : 2020

N/S St: Lyndon Ln

SIGNALIZED INTERSECTION SUMMARY

	Eastbound			Westbound			Northbound			Southbound		
	L	T	R	L	T	R	L	T	R	L	T	R
No. Lanes	1	3	0	1	3	1	1	1	0	0	1	0
LGConfig	L	TR		L	T	R	L	TR			LTR	
Volume	150	2380	130	30	2320	180	190	90	40	210	100	60
Lane Width	12.0	12.0		12.0	12.0	12.0	12.0	12.0			12.0	
RTOR Vol			3			14			11			6

Duration 0.25 Area Type: All other areas

Signal Operations

Phase Combination	1	2	3	4		5	6	7	8
EB Left	A				NB Left	A			
Thru		A			Thru	A			
Right		A			Right	A			
Peds		X			Peds	X			
WB Left	A				SB Left	A			
Thru		A			Thru	A			
Right		A			Right	A			
Peds					Peds	X			
NB Right					EB Right				
SB Right					WB Right				
Green	10.4	77.5			37.1				
Yellow	4.0	4.0			4.0				
All Red	1.0	1.0			1.0				

Cycle Length: 140.0 secs

Intersection Performance Summary

Appr/ Lane Grp	Lane Group Capacity	Adj Sat Flow Rate (s)	Ratios v/c	Ratios g/C	Lane Group Delay	Lane Group LOS	Approach Delay	Approach LOS
Eastbound								
L	134	1805	1.25	0.07	223.2	F		
TR	2843	5136	0.98	0.55	43.0	D	53.2	D
Westbound								
L	134	1805	0.25	0.07	62.1	E		
T	2865	5176	0.90	0.55	32.1	C	31.4	C
R	894	1615	0.21	0.55	15.9	B		
Northbound								
L	281	1061	0.75	0.26	58.0	E		
TR	485	1831	0.27	0.26	41.1	D	51.5	D
Southbound								
LTR	296	1116	1.36	0.26	235.9	F	235.9	F

Intersection Delay = 55.1 (sec/veh) Intersection LOS = E

HCS+: Signalized Intersections Release 5.2

Analyst:
Agency: Gresham Smith and Partners
Date: 1/23/2006
Period: A.M
Project ID: Estimated 6 Lanes
E/W St: Shelbyville Rd

Inter.: Shelbyville / Whittington Pkwy
Area Type: All other areas
Jurisd:
Year : 2020

N/S St: Whittington Pkwy

SIGNALIZED INTERSECTION SUMMARY

	Eastbound			Westbound			Northbound			Southbound		
	L	T	R	L	T	R	L	T	R	L	T	R
No. Lanes	1	3	1	1	3	1	1	1	0	1	1	1
LGConfig	L	T	R	L	T	R	L	TR		L	T	R
Volume	375	1309	508	126	1844	120	60	45	31	46	10	83
Lane Width	12.0	12.0	12.0	12.0	12.0	12.0	12.0	12.0		12.0	12.0	12.0
RTOR Vol			150			0			27			0

Duration 0.25 Area Type: All other areas

Signal Operations

Phase Combination	1	2	3	4		5	6	7	8
EB Left	A	A			NB Left	A			
Thru		A			Thru	A			
Right		A			Right	A			
Peds		X			Peds	X			
WB Left	A	A			SB Left	A			
Thru		A			Thru	A			
Right		A			Right	A			
Peds		X			Peds	X			
NB Right					EB Right				
SB Right					WB Right				
Green	22.3	50.0				12.0			
Yellow	4.0	4.0				5.0			
All Red	1.0	1.0				1.0			

Cycle Length: 100.3 secs

Intersection Performance Summary

Appr/ Lane Grp	Lane Group Capacity	Adj Sat Flow Rate (s)	Ratios v/c	Ratios g/C	Lane Group Delay	Lane Group LOS	Approach Delay	Approach LOS
Eastbound								
L	477	1805	0.87	0.77	31.6	C		
T	2580	5176	0.56	0.50	17.6	B	20.0+	C
R	805	1615	0.49	0.50	16.8	B		
Westbound								
L	510	1805	0.27	0.77	7.1	A		
T	2580	5176	0.79	0.50	22.7	C	21.2	C
R	805	1615	0.17	0.50	13.8	B		
Northbound								
L	171	1426	0.39	0.12	40.9	D		
TR	225	1879	0.24	0.12	40.1	D	40.5	D
Southbound								
L	164	1371	0.31	0.12	41.5	D		
T	227	1900	0.05	0.12	39.2	D	42.3	D
R	193	1615	0.48	0.12	43.1	D		

Intersection Delay = 21.8 (sec/veh) Intersection LOS = C

HCS+: Signalized Intersections Release 5.2

Analyst:
Agency: Gresham Smith and Partners
Date: 1/23/2006
Period: P.M
Project ID: Estimated 6 Lanes
E/W St: Shelbyville Rd

Inter.: Shelbyville / Whittington Pkwy
Area Type: All other areas
Jurisd:
Year : 2020

N/S St: Whittington Pkwy

SIGNALIZED INTERSECTION SUMMARY

	Eastbound			Westbound			Northbound			Southbound		
	L	T	R	L	T	R	L	T	R	L	T	R
No. Lanes	1	3	1	1	3	1	1	1	0	1	1	1
LGConfig	L	T	R	L	T	R	L	TR		L	T	R
Volume	65	1696	253	68	1832	21	441	8	164	108	40	336
Lane Width	12.0	12.0	12.0	12.0	12.0	12.0	12.0	12.0		12.0	12.0	12.0
RTOR Vol			89			0			108			0

Duration 0.25 Area Type: All other areas

Signal Operations

Phase Combination	1	2	3	4		5	6	7	8
EB Left	A	A			NB Left	A			
Thru		A			Thru	A			
Right		A			Right	A			
Peds		X			Peds	X			
WB Left	A	A			SB Left	A			
Thru		A			Thru	A			
Right		A			Right	A			
Peds		X			Peds	X			
NB Right					EB Right				
SB Right					WB Right				
Green	5.7	55.2				43.1			
Yellow	4.0	4.0				5.0			
All Red	1.0	1.0				1.0			

Cycle Length: 120.0 secs

Intersection Performance Summary

Appr/ Lane Grp	Lane Group Capacity	Adj Sat Flow Rate (s)	Ratios v/c	Ratios g/C	Lane Group Delay	Lane Group LOS	Approach Delay	Approach LOS
Eastbound								
L	149	1805	0.48	0.55	23.1	C		
T	2381	5176	0.79	0.46	27.7	C	26.9	C
R	743	1615	0.24	0.46	19.7	B		
Westbound								
L	149	1805	0.51	0.55	24.2	C		
T	2381	5176	0.86	0.46	32.1	C	31.7	C
R	743	1615	0.03	0.46	17.8	B		
Northbound								
L	497	1384	0.99	0.36	47.3	D		
TR	593	1651	0.12	0.36	25.8	C	44.6	D
Southbound								
L	485	1350	0.25	0.36	27.3	C		
T	682	1900	0.06	0.36	25.3	C	32.1	C
R	580	1615	0.64	0.36	34.5	C		

Intersection Delay = 31.2 (sec/veh) Intersection LOS = C

HCS+: Signalized Intersections Release 5.2

Analyst:
Agency: Gresham Smith and Partners
Date: 1/24/2006
Period: A.M
Project ID: Optimized
E/W St: Taylorsville Rd

Inter.: Taylorsville Rd./ Hurstbourne
Area Type: All other areas
Jurisd:
Year : 2020
N/S St: Hurstbourne Pkwy

SIGNALIZED INTERSECTION SUMMARY

	Eastbound			Westbound			Northbound			Southbound		
	L	T	R	L	T	R	L	T	R	L	T	R
No. Lanes	2	3	1	1	3	1	2	2	1	2	2	1
LGConfig	L	T	R	L	T	R	L	T	R	L	T	R
Volume	640	60	30	80	1100	1270	210	1800	30	440	650	460
Lane Width	12.0	12.0	12.0	12.0	12.0	12.0	12.0	12.0	12.0	12.0	12.0	12.0
RTOR Vol			22			290			5			296

Duration 0.25 Area Type: All other areas

Signal Operations

Phase Combination	1	2	3	4		5	6	7	8
EB Left	A				NB Left	A			
Thru		A			Thru		A		
Right		A			Right		A		
Peds		X			Peds		X		
WB Left	A				SB Left	A			
Thru		A			Thru		A		
Right		A			Right		A		
Peds					Peds				
NB Right					EB Right				
SB Right					WB Right				
Green	21.5	50.9				15.4	66.2		
Yellow	4.5	5.0				4.5	5.0		
All Red	1.5	2.0				1.5	2.0		

Cycle Length: 180.0 secs

Intersection Performance Summary

Appr/ Lane Grp	Lane Group Capacity	Adj Sat Flow Rate (s)	Ratios v/c	Ratios g/C	Lane Group Delay	Lane Group LOS	Approach Delay	Approach LOS
Eastbound								
L	419	3505	1.70	0.12	403.0	F		
T	1464	5176	0.05	0.28	46.9	D	368.6	F
R	457	1615	0.02	0.28	46.6	D		
Westbound								
L	216	1805	0.41	0.12	74.7	E		
T	1464	5176	0.83	0.28	65.0	E	350.6	F
R	457	1615	2.38	0.28	693.6	F		
Northbound								
L	300	3505	0.78	0.09	92.7	F		
T	1331	3618	1.50	0.37	287.1	F	263.9	F
R	594	1615	0.05	0.37	36.6	D		
Southbound								
L	300	3505	1.63	0.09	380.6	F		
T	1331	3618	0.54	0.37	45.4	D	162.5	F
R	594	1615	0.31	0.37	40.8	D		

Intersection Delay = 285.7 (sec/veh) Intersection LOS = F

HCS+: Signalized Intersections Release 5.2

Analyst:
Agency: Gresham Smith and Partners
Date: 1/24/2006
Period: P.M
Project ID: Optimized
E/W St: Taylorsville Rd

Inter.: Taylorsville Rd/Hurstbourne Pk
Area Type: All other areas
Jurisd:
Year : 2020
N/S St: Hurstbourne Pkwy

SIGNALIZED INTERSECTION SUMMARY

	Eastbound			Westbound			Northbound			Southbound		
	L	T	R	L	T	R	L	T	R	L	T	R
No. Lanes	2	3	1	1	3	1	2	2	1	2	2	1
LGConfig	L	T	R	L	T	R	L	T	R	L	T	R
Volume	660	1090	110	240	830	760	200	960	180	1210	1830	1130
Lane Width	12.0	12.0	12.0	12.0	12.0	12.0	12.0	12.0	12.0	12.0	12.0	12.0
RTOR Vol			73			366			61			180

Duration 0.25 Area Type: All other areas

Signal Operations

Phase Combination	1	2	3	4		5	6	7	8
EB Left	A				NB Left	A			
Thru		A			Thru		A		
Right		A			Right		A		
Peds		X			Peds		X		
WB Left	A				SB Left	A			
Thru		A			Thru		A		
Right		A			Right		A		
Peds					Peds				
NB Right					EB Right				
SB Right					WB Right				
Green	21.0	35.7				26.3	71.0		
Yellow	4.5	5.0				4.5	5.0		
All Red	1.5	2.0				1.5	2.0		

Cycle Length: 180.0 secs

Intersection Performance Summary

Appr/ Lane Grp	Lane Group Capacity	Adj Sat Flow Rate (s)	Ratios v/c	Ratios g/C	Lane Group Delay	Lane Group LOS	Approach Delay	Approach LOS
Eastbound								
L	409	3505	1.79	0.12	445.7	F		
T	1027	5176	1.18	0.20	163.0	F	265.3	F
R	320	1615	0.13	0.20	59.5	E		
Westbound								
L	211	1805	1.27	0.12	231.0	F		
T	1027	5176	0.90	0.20	80.9	F	152.9	F
R	320	1615	1.37	0.20	256.8	F		
Northbound								
L	512	3505	0.43	0.15	70.7	E		
T	1427	3618	0.75	0.39	49.0	D	51.2	D
R	637	1615	0.21	0.39	36.1	D		
Southbound								
L	512	3505	2.63	0.15	813.7	F		
T	1427	3618	1.42	0.39	249.7	F	446.4	F
R	637	1615	1.66	0.39	357.5	F		

Intersection Delay = 298.6 (sec/veh) Intersection LOS = F

HCS+: Signalized Intersections Release 5.2

Analyst:
Agency: Gresham Smith and Partners
Date: 1/24/2006
Period: A.M
Project ID: Estimated
E/W St: Westport Rd

Inter.: Westport Rd./ Hurstbourne
Area Type: All other areas
Jurisd:
Year : 2020
N/S St: Hurstbourne Pkwy

SIGNALIZED INTERSECTION SUMMARY

	Eastbound			Westbound			Northbound			Southbound		
	L	T	R	L	T	R	L	T	R	L	T	R
No. Lanes	2	2	1	2	2	1	1	2	1	2	2	1
LGConfig	L	T	R	L	T	R	L	T	R	L	T	R
Volume	120	400	330	700	610	170	160	330	300	110	800	160
Lane Width	12.0	12.0	12.0	12.0	12.0	12.0	12.0	12.0	12.0	12.0	12.0	12.0
RTOR Vol			148			112			205			73

Duration 0.25 Area Type: All other areas

Signal Operations

Phase Combination	1	2	3	4		5	6	7	8
EB Left	A				NB Left	A	A		
Thru			A		Thru		A	A	
Right			A		Right		A	A	
Peds			X		Peds		X	X	
WB Left	A	A			SB Left	A			
Thru		A	A		Thru			A	
Right		A	A		Right			A	
Peds		X	X		Peds			X	
NB Right					EB Right				
SB Right					WB Right				
Green	9.2	5.8	22.0			8.6	1.0	36.3	
Yellow	4.0	4.3	4.3			4.5	4.5	4.5	
All Red	1.0	1.0	2.0			1.0	2.0	1.0	

Cycle Length: 117.0 secs

Intersection Performance Summary

Appr/ Lane Grp	Lane Group Capacity	Adj Sat Flow Rate (s)	Ratios v/c	Ratios g/C	Lane Group Delay	Lane Group LOS	Approach Delay	Approach LOS
Eastbound								
L	276	3505	0.48	0.08	52.9	D		
T	680	3618	0.65	0.19	46.2	D	48.2	D
R	304	1615	0.66	0.19	49.5	D		
Westbound								
L	599	3505	1.30	0.17	195.0	F		
T	1024	3618	0.66	0.28	38.6	D	118.3	F
R	457	1615	0.14	0.28	31.5	C		
Northbound								
L	233	1805	0.76	0.13	63.2	E		
T	1354	3618	0.27	0.37	25.6	C	35.7	D
R	605	1615	0.18	0.37	24.6	C		
Southbound								
L	258	3505	0.47	0.07	53.4	D		
T	1123	3618	0.79	0.31	40.8	D	41.3	D
R	501	1615	0.19	0.31	29.8	C		

Intersection Delay = 70.6 (sec/veh) Intersection LOS = E

HCS+: Signalized Intersections Release 5.2

Analyst:
Agency: Gresham Smith and Partners
Date: 1/24/2006
Period: P.M
Project ID: Estimated
E/W St: Westport Rd

Inter.: Westport Rd./ Hurstbourne
Area Type: All other areas
Jurisd:
Year : 2020
N/S St: Hurstbourne Pkwy

SIGNALIZED INTERSECTION SUMMARY

	Eastbound			Westbound			Northbound			Southbound		
	L	T	R	L	T	R	L	T	R	L	T	R
No. Lanes	2	2	1	2	2	1	1	2	1	2	2	1
LGConfig	L	T	R	L	T	R	L	T	R	L	T	R
Volume	190	720	290	490	670	190	340	970	960	200	610	170
Lane Width	12.0	12.0	12.0	12.0	12.0	12.0	12.0	12.0	12.0	12.0	12.0	12.0
RTOR Vol			125			114			313			101

Duration 0.25 Area Type: All other areas

Signal Operations

Phase Combination	1	2	3	4		5	6	7	8
EB Left	A				NB Left	A	A		
Thru			A		Thru		A	A	
Right			A		Right		A	A	
Peds			X		Peds		X	X	
WB Left	A	A			SB Left	A			
Thru		A	A		Thru			A	
Right		A	A		Right			A	
Peds		X	X		Peds			X	
NB Right					EB Right				
SB Right					WB Right				
Green	11.8	6.6	37.0			12.1	7.9	35.6	
Yellow	4.0	4.3	4.3			4.0	4.5	4.5	
All Red	1.0	1.0	2.0			1.0	2.0	2.0	

Cycle Length: 145.6 secs

Intersection Performance Summary

Appr/ Lane Grp	Lane Group Capacity	Adj Sat Flow Rate (s)	Ratios v/c	Ratios g/C	Lane Group Delay	Lane Group LOS	Approach Delay	Approach LOS
Eastbound								
L	284	3505	0.74	0.08	75.5	E		
T	919	3618	0.87	0.25	61.1	E	61.4	E
R	410	1615	0.45	0.25	46.5	D		
Westbound								
L	563	3505	0.97	0.16	90.2	F		
T	1215	3618	0.61	0.34	41.3	D	60.3	E
R	542	1615	0.15	0.34	34.0	C		
Northbound								
L	310	1805	1.22	0.17	184.6	F		
T	1242	3618	0.87	0.34	51.5	D	121.7	F
R	555	1615	1.30	0.34	193.7	F		
Southbound								
L	291	3505	0.76	0.08	76.7	E		
T	885	3618	0.77	0.24	55.2	E	59.2	E
R	395	1615	0.19	0.24	43.9	D		

Intersection Delay = 83.7 (sec/veh) Intersection LOS = F

HCS+: Signalized Intersections Release 5.2

Analyst:
Agency: Gresham Smith and Partners
Date: 1/23/2006
Period: A.M
Project ID: Optimized
E/W St: Whittington Pkwy

Inter.: Whittington Pkwy / Hurstbourne
Area Type: All other areas
Jurisd:
Year : 2020

N/S St: Hurstbourne Pkwy

SIGNALIZED INTERSECTION SUMMARY

	Eastbound			Westbound			Northbound			Southbound		
	L	T	R	L	T	R	L	T	R	L	T	R
No. Lanes	0	1	1	0	1	1	2	3	0	1	3	1
LGConfig		LT	R		LT	R	L	TR		L	T	R
Volume	46	15	184	31	15	26	266	1368	15	5	999	236
Lane Width		12.0	12.0		12.0	12.0	12.0	12.0		12.0	12.0	12.0
RTOR Vol			0			26			10			105

Duration 0.25 Area Type: All other areas

Signal Operations

Phase Combination	1	2	3	4		5	6	7	8
EB Left	A				NB Left	A	A		
Thru	A				Thru		A	A	
Right	A				Right		A	A	
Peds	X				Peds				
WB Left	A				SB Left	A			
Thru	A				Thru			A	
Right	A				Right			A	
Peds					Peds				
NB Right					EB Right				
SB Right					WB Right				
Green	30.6					4.4	8.9	112.1	
Yellow	4.5					4.5	4.5	4.5	
All Red	1.5					1.5	1.5	1.5	

Cycle Length: 180.0 secs

Intersection Performance Summary

Appr/ Lane Grp	Lane Group Capacity	Adj Sat Flow Rate (s)	Ratios v/c	Ratios g/C	Lane Group Delay	Lane Group LOS	Approach Delay	Approach LOS
Eastbound								
LT	241	1419	0.28	0.17	65.8	E	77.4	E
R	275	1615	0.74	0.17	81.3	F		
Westbound								
LT	251	1477	0.20	0.17	64.6	E	64.6	E
R	275	1615	0.00	0.17	62.0	E		
Northbound								
L	376	3505	0.79	0.11	89.0	F		
TR	3650	5173	0.42	0.71	11.1	B	23.8	C
Southbound								
L	44	1805	0.14	0.02	87.4	F		
T	3223	5176	0.34	0.62	16.4	B	16.4	B
R	1006	1615	0.15	0.62	14.1	B		

Intersection Delay = 26.0 (sec/veh) Intersection LOS = C

HCS+: Signalized Intersections Release 5.2

Analyst:
Agency: Gresham Smith and Partners
Date: 1/23/2006
Period: P.M
Project ID: Optimized
E/W St: Whittington Pkwy

Inter.: Whittington Pkwy / Hurstbourne
Area Type: All other areas
Jurisd:
Year : 2020

N/S St: Hurstbourne Pkwy

SIGNALIZED INTERSECTION SUMMARY

	Eastbound			Westbound			Northbound			Southbound		
	L	T	R	L	T	R	L	T	R	L	T	R
No. Lanes	0	1	1	0	1	1	2	3	0	1	3	1
LGConfig		LT	R		LT	R	L	TR		L	T	R
Volume	302	20	461	46	26	20	179	2037	31	15	1511	133
Lane Width		12.0	12.0		12.0	12.0	12.0	12.0		12.0	12.0	12.0
RTOR Vol			0			14			18			110

Duration 0.25 Area Type: All other areas

Signal Operations

Phase Combination	1	2	3	4		5	6	7	8
EB Left	A				NB Left	A	A		
Thru	A				Thru		A	A	
Right	A				Right		A	A	
Peds	X				Peds				
WB Left	A				SB Left	A			
Thru	A				Thru			A	
Right	A				Right			A	
Peds					Peds				
NB Right					EB Right				
SB Right					WB Right				
Green	62.1					4.0	4.0	85.9	
Yellow	4.5					4.5	4.5	4.5	
All Red	1.5					1.5	1.5	1.5	

Cycle Length: 180.0 secs

Intersection Performance Summary

Appr/ Lane Grp	Lane Group Capacity	Adj Sat Flow Rate (s)	Ratios v/c	Ratios g/C	Lane Group Delay	Lane Group LOS	Approach Delay	Approach LOS
Eastbound								
LT	447	1295	0.80	0.34	63.4	E	71.4	E
R	557	1615	0.92	0.34	77.1	E		
Westbound								
LT	304	882	0.26	0.34	42.9	D	42.6	D
R	557	1615	0.01	0.34	38.8	D		
Northbound								
L	273	3505	0.73	0.08	82.1	F		
TR	2755	5171	0.83	0.53	35.3	D	39.1	D
Southbound								
L	40	1805	0.43	0.02	87.5	F		
T	2470	5176	0.68	0.48	36.5	D	36.8	D
R	771	1615	0.03	0.48	25.0	C		

Intersection Delay = 43.8 (sec/veh) Intersection LOS = D

HCS+: Unsignalized Intersections Release 5.2

TWO-WAY STOP CONTROL SUMMARY

Analyst:
Agency/Co.: Gresham Smith and Partners
Date Performed: 1/27/2006
Analysis Time Period: A.M
Intersection: Shelbyville/ Whipps Mill Rd
Jurisdiction:
Units: U. S. Customary
Analysis Year: 2020
Project ID:
East/West Street: Shelbyville Rd.
North/South Street: Whipps Mill Rd
Intersection Orientation: EW Study period (hrs): 0.25

Vehicle Volumes and Adjustments

Major Street: Approach	Eastbound			Westbound		
Movement	1	2	3	4	5	6
	L	T	R	L	T	R
Volume	480	2500	70	10	2510	10
Peak-Hour Factor, PHF	1.00	1.00	1.00	1.00	1.00	1.00
Hourly Flow Rate, HFR	480	2500	70	10	2510	10
Percent Heavy Vehicles	0	--	--	0	--	--
Median Type/Storage	TWLTL			/ 1		
RT Channelized?						No
Lanes	1	2	0	1	2	1
Configuration	L	T	TR	L	T	R
Upstream Signal?		Yes			Yes	

Minor Street: Approach	Northbound			Southbound		
Movement	7	8	9	10	11	12
	L	T	R	L	T	R
Volume	10	10	30	10	10	480
Peak Hour Factor, PHF	1.00	1.00	1.00	1.00	1.00	1.00
Hourly Flow Rate, HFR	10	10	30	10	10	480
Percent Heavy Vehicles	0	0	0	0	0	0
Percent Grade (%)		0			0	
Flared Approach: Exists?/Storage			No /			/
Lanes	0	1	0	0	1	1
Configuration		LTR		LT	R	

Delay, Queue Length, and Level of Service

Approach	EB	WB	Northbound			Southbound		
Movement	1	4	7	8	9	10	11	12
Lane Config	L	L		LTR		LT		R
v (vph)	480	10		50		20		480
C(m) (vph)	140							411
v/c	3.43							1.17
95% queue length	46.38							18.40
Control Delay	1159							129.2
LOS	F							F
Approach Delay								
Approach LOS								

HCS+: Unsignalized Intersections Release 5.2

TWO-WAY STOP CONTROL SUMMARY

Analyst:
Agency/Co.: Gresham Smith and Partners
Date Performed: 1/27/2006
Analysis Time Period: P.M
Intersection: Shelbyville/ Whipps Mill Rd
Jurisdiction:
Units: U. S. Customary
Analysis Year: 2020
Project ID:
East/West Street: Shelbyville Rd.
North/South Street: Whipps Mill Rd
Intersection Orientation: EW Study period (hrs): 0.25

Vehicle Volumes and Adjustments

Major Street: Approach	Eastbound			Westbound		
Movement	1	2	3	4	5	6
	L	T	R	L	T	R
Volume	380	2070	30	10	2380	20
Peak-Hour Factor, PHF	1.00	1.00	1.00	1.00	1.00	1.00
Hourly Flow Rate, HFR	380	2070	30	10	2380	20
Percent Heavy Vehicles	0	--	--	0	--	--
Median Type/Storage	TWLTL			/ 1		
RT Channelized?						No
Lanes	1	2	0	1	2	1
Configuration	L	T	TR	L	T	R
Upstream Signal?		Yes			Yes	

Minor Street: Approach	Northbound			Southbound		
Movement	7	8	9	10	11	12
	L	T	R	L	T	R
Volume	10	10	10	10	10	410
Peak Hour Factor, PHF	1.00	1.00	1.00	1.00	1.00	1.00
Hourly Flow Rate, HFR	10	10	10	10	10	410
Percent Heavy Vehicles	0	0	0	0	0	0
Percent Grade (%)		0			0	
Flared Approach: Exists?/Storage			No /			/
Lanes	0	1	0	0	1	1
Configuration		LTR		LT	R	

Delay, Queue Length, and Level of Service

Approach	EB	WB	Northbound			Southbound		
Movement	1	4	7	8	9	10	11	12
Lane Config	L	L		LTR		LT		R
v (vph)	380	10		30		20		410
C(m) (vph)								
v/c								
95% queue length								
Control Delay								
LOS								
Approach Delay								
Approach LOS								

HCS+: Unsignalized Intersections Release 5.2

TWO-WAY STOP CONTROL SUMMARY

Analyst:
Agency/Co.: Gresham Smith and Partners
Date Performed: 1/24/2006
Analysis Time Period: A.M.
Intersection: Shelbyville Rd/ Blue Ridge Ma
Jurisdiction:
Units: U. S. Customary
Analysis Year: 2020
Project ID:
East/West Street: Shelbyville Rd
North/South Street: Blue Ridge Manor
Intersection Orientation: EW Study period (hrs): 0.25

Vehicle Volumes and Adjustments

Major Street: Approach	Eastbound			Westbound		
Movement	1	2	3	4	5	6
	L	T	R	L	T	R
Volume	0	863	8	7	1633	0
Peak-Hour Factor, PHF	1.00	1.00	1.00	1.00	1.00	1.00
Hourly Flow Rate, HFR	0	863	8	7	1633	0
Percent Heavy Vehicles	0	--	--	0	--	--
Median Type/Storage	TWLTL			/ 1		
RT Channelized?			No			
Lanes	1	2	1	1	2	0
Configuration	L	T	R	L	T	TR
Upstream Signal?		Yes			Yes	

Minor Street: Approach	Northbound			Southbound		
Movement	7	8	9	10	11	12
	L	T	R	L	T	R
Volume	17		17			
Peak Hour Factor, PHF	1.00		1.00			
Hourly Flow Rate, HFR	17		17			
Percent Heavy Vehicles	0		0			
Percent Grade (%)		0			0	
Flared Approach: Exists?/Storage			/			/
Lanes	1		1			
Configuration	L		R			

Delay, Queue Length, and Level of Service

Approach	EB	WB	Northbound			Southbound		
Movement	1	4	7	8	9	10	11	12
Lane Config	L	L	L		R			
v (vph)	0	7	17		17			
C(m) (vph)	449	747	253		490			
v/c	0.00	0.01	0.07		0.03			
95% queue length	0.00	0.03	0.21		0.11			
Control Delay	13.0	9.9	20.3		12.6			
LOS	B	A	C		B			
Approach Delay				16.4				
Approach LOS				C				

HCS+: Unsignalized Intersections Release 5.2

TWO-WAY STOP CONTROL SUMMARY

Analyst:
Agency/Co.: Gresham Smith and Partners
Date Performed: 1/24/2006
Analysis Time Period: P.M.
Intersection: Shelbyville Rd/ Blue Ridge Ma
Jurisdiction:
Units: U. S. Customary
Analysis Year: 2020
Project ID:
East/West Street: Shelbyville Rd
North/South Street: Blue Ridge Manor
Intersection Orientation: EW Study period (hrs): 0.25

Vehicle Volumes and Adjustments

Major Street: Approach	Eastbound			Westbound		
Movement	1	2	3	4	5	6
	L	T	R	L	T	R
Volume	0	1747	23	27	1343	0
Peak-Hour Factor, PHF	1.00	1.00	1.00	1.00	1.00	1.00
Hourly Flow Rate, HFR	0	1747	23	27	1343	0
Percent Heavy Vehicles	0	--	--	0	--	--
Median Type/Storage	TWLTL			/ 1		
RT Channelized?			No			
Lanes	1	2	1	1	2	0
Configuration	L	T	R	L	T	TR
Upstream Signal?		Yes			Yes	

Minor Street: Approach	Northbound			Southbound		
Movement	7	8	9	10	11	12
	L	T	R	L	T	R
Volume	11		23			
Peak Hour Factor, PHF	1.00		1.00			
Hourly Flow Rate, HFR	11		23			
Percent Heavy Vehicles	0		0			
Percent Grade (%)		0			0	
Flared Approach: Exists?/Storage			/			/
Lanes	1		1			
Configuration	L		R			

Delay, Queue Length, and Level of Service

Approach	EB	WB	Northbound			Southbound		
Movement	1	4	7	8	9	10	11	12
Lane Config	L	L	L		R			
v (vph)	0	27	11		23			
C(m) (vph)		398			760			
v/c		0.07			0.03			
95% queue length		0.22			0.09			
Control Delay		14.7			9.9			
LOS		B			A			
Approach Delay								
Approach LOS								

HCS+: Unsignalized Intersections Release 5.2

TWO-WAY STOP CONTROL SUMMARY

Analyst:
Agency/Co.: Gresham Smith and Partners
Date Performed: 1/23/2006
Analysis Time Period: A.M
Intersection: Tamarisk Pkwy / Hurstbourne
Jurisdiction:
Units: U. S. Customary
Analysis Year: 2020
Project ID:
East/West Street: Tamarisk Pkwy
North/South Street: Hurstbourne Pkwy
Intersection Orientation: NS Study period (hrs): 0.25

Vehicle Volumes and Adjustments

Major Street: Approach	Northbound			Southbound		
Movement	1	2	3	4	5	6
	L	T	R	L	T	R
Volume	2	1004	10	9	1450	3
Peak-Hour Factor, PHF	1.00	1.00	1.00	1.00	1.00	1.00
Hourly Flow Rate, HFR	2	1004	10	9	1450	3
Percent Heavy Vehicles	0	--	--	0	--	--
Median Type/Storage	Raised curb / 1					
RT Channelized?			No			
Lanes	1	2	1	1	2	0
Configuration	L	T	R	L	T	TR
Upstream Signal?		Yes			Yes	

Minor Street: Approach	Westbound			Eastbound		
Movement	7	8	9	10	11	12
	L	T	R	L	T	R
Volume	70	0	46	1	0	0
Peak Hour Factor, PHF	1.00	1.00	1.00	1.00	1.00	1.00
Hourly Flow Rate, HFR	70	0	46	1	0	0
Percent Heavy Vehicles	0	0	0	0	0	0
Percent Grade (%)		0			0	
Flared Approach: Exists?/Storage			No /			Yes /1
Lanes	1	1	0	0	1	0
Configuration	L	TR			LTR	

Delay, Queue Length, and Level of Service

Approach	NB	SB	Westbound			Eastbound		
Movement	1	4	7	8	9	10	11	12
Lane Config	L	L	L		TR		LTR	
v (vph)	2	9	70		46		1	
C(m) (vph)	472	987	246		771			
v/c	0.00	0.01	0.28		0.06			
95% queue length	0.01	0.03	1.13		0.19			
Control Delay	12.7	8.7	25.4		10.0-		36.9	
LOS	B	A	D		A			
Approach Delay				19.3			36.9	
Approach LOS				C			E	

HCS+: Unsignalized Intersections Release 5.2

TWO-WAY STOP CONTROL SUMMARY

Analyst:
Agency/Co.: Gresham Smith and Partners
Date Performed: 1/23/2006
Analysis Time Period: P.M
Intersection: Tamarisk Pkwy / Hurstbourne
Jurisdiction:
Units: U. S. Customary
Analysis Year: 2020
Project ID:
East/West Street: Tamarisk Pkwy
North/South Street: Hurstbourne Pkwy
Intersection Orientation: NS Study period (hrs): 0.25

Vehicle Volumes and Adjustments

Major Street: Approach	Northbound			Southbound		
Movement	1	2	3	4	5	6
	L	T	R	L	T	R
Volume	6	1310	58	56	1045	0
Peak-Hour Factor, PHF	1.00	1.00	1.00	1.00	1.00	1.00
Hourly Flow Rate, HFR	6	1310	58	56	1045	0
Percent Heavy Vehicles	0	--	--	0	--	--
Median Type/Storage	Raised curb / 1					
RT Channelized?			Yes			
Lanes	1	2	1	1	2	0
Configuration	L	T	R	L	T	TR
Upstream Signal?		Yes			Yes	

Minor Street: Approach	Westbound			Eastbound		
Movement	7	8	9	10	11	12
	L	T	R	L	T	R
Volume	27	0	42	4	0	14
Peak Hour Factor, PHF	1.00	1.00	1.00	1.00	1.00	1.00
Hourly Flow Rate, HFR	27	0	42	4	0	14
Percent Heavy Vehicles	0	0	0	0	0	0
Percent Grade (%)		0			0	
Flared Approach: Exists?/Storage			No /			Yes /1
Lanes	1	1	0	0	1	0
Configuration	L	TR			LTR	

Delay, Queue Length, and Level of Service

Approach	NB	SB	Westbound			Eastbound		
Movement	1	4	7	8	9	10	11	12
Lane Config	L	L	L		TR		LTR	
v (vph)	6	56	27		42		18	
C(m) (vph)		711						
v/c		0.08						
95% queue length		0.26						
Control Delay		10.5						
LOS		B						
Approach Delay								
Approach LOS								

HCS+: Signalized Intersections Release 5.2

Analyst:
Agency: Gresham Smith and Partners
Date: 1/23/2006
Period: A.M
Project ID: Optimized
E/W St: Linn Station

Inter.: Linn Station/Hurstbourne Pkwy
Area Type: All other areas
Jurisd:
Year : 2030
N/S St: Hurstbourne Pkwy

SIGNALIZED INTERSECTION SUMMARY

	Eastbound			Westbound			Northbound			Southbound		
	L	T	R	L	T	R	L	T	R	L	T	R
No. Lanes	1	1	1	2	1	1	2	3	1	2	3	1
LGConfig	L	LT	R	L	T	R	L	T	R	L	T	R
Volume	100	150	580	810	90	100	560	1720	1300	200	1230	100
Lane Width	12.0	12.0	12.0	12.0	12.0	12.0	12.0	12.0	12.0	12.0	12.0	12.0
RTOR Vol			340			89			465			60

Duration 0.25 Area Type: All other areas

Signal Operations

Phase Combination	1	2	3	4	5	6	7	8
EB Left	A				A	A		
Thru	A					A	A	
Right	A					A	A	
Peds	X					X	X	
WB Left		A			A			
Thru		A					A	
Right		A					A	
Peds		X					X	
NB Right								
SB Right								
Green	19.3	31.0			9.4	22.9	62.4	
Yellow	5.0	5.0			5.0	5.0	5.0	
All Red	2.0	2.0			2.0	2.0	2.0	

Cycle Length: 180.0 secs

Intersection Performance Summary

Appr/ Lane Grp	Lane Group Capacity	Adj Sat Flow Rate (s)	Ratios v/c	Ratios g/C	Lane Group Delay	Lane Group LOS	Approach Delay	Approach LOS
Eastbound								
L	194	1805	0.57	0.11	80.5	F		
LT	204	1900	0.82	0.11	101.0	F	219.6	F
R	173	1615	1.54	0.11	351.5	F		
Westbound								
L	604	3505	1.49	0.17	303.7	F		
T	327	1900	0.31	0.17	65.6	E	277.4	F
R	278	1615	0.04	0.17	62.2	E		
Northbound								
L	765	3505	0.81	0.22	73.6	E		
T	2654	5176	0.72	0.51	34.8	C	63.0	E
R	828	1615	1.12	0.51	113.9	F		
Southbound								
L	183	3505	1.21	0.05	220.8	F		
T	1794	5176	0.76	0.35	54.2	D	76.4	E
R	560	1615	0.08	0.35	39.6	D		

Intersection Delay = 111.7 (sec/veh) Intersection LOS = F

HCS+: Signalized Intersections Release 5.2

Analyst:
Agency: Gresham Smith and Partners
Date: 1/23/2006
Period: P.M
Project ID: Optimized
E/W St: Linn Station

Inter.: Linn Station/Hurstbourne Pkwy
Area Type: All other areas
Jurisd:
Year : 2030
N/S St: Hurstbourne Pkwy

SIGNALIZED INTERSECTION SUMMARY

	Eastbound			Westbound			Northbound			Southbound		
	L	T	R	L	T	R	L	T	R	L	T	R
No. Lanes	1	1	1	2	1	1	2	3	1	2	3	1
LGConfig	L	LT	R	L	T	R	L	T	R	L	T	R
Volume	110	210	620	1470	320	220	610	1830	1100	210	1710	70
Lane Width	12.0	12.0	12.0	12.0	12.0	12.0	12.0	12.0	12.0	12.0	12.0	12.0
RTOR Vol			365			165			733			30

Duration 0.25 Area Type: All other areas

Signal Operations

Phase Combination	1	2	3	4	5	6	7	8
EB Left	A				A	A		
Thru	A					A	A	
Right	A					A	A	
Peds	X					X	X	
WB Left		A			A			
Thru		A					A	
Right		A					A	
Peds		X					X	
NB Right								
SB Right								
Green	18.5	46.5			7.9	10.7	61.4	
Yellow	5.0	5.0			5.0	5.0	5.0	
All Red	2.0	2.0			2.0	2.0	2.0	

Cycle Length: 180.0 secs

Intersection Performance Summary

Appr/ Lane Grp	Lane Group Capacity	Adj Sat Flow Rate (s)	Ratios v/c	Ratios g/C	Lane Group Delay	Lane Group LOS	Approach Delay	Approach LOS
Eastbound								
L	186	1805	0.66	0.10	85.8	F		
LT	195	1900	1.19	0.10	207.6	F	279.5	F
R	166	1615	1.70	0.10	422.3	F		
Westbound								
L	905	3505	1.80	0.26	433.1	F		
T	491	1900	0.73	0.26	66.2	E	358.1	F
R	417	1615	0.15	0.26	51.6	D		
Northbound								
L	498	3505	1.36	0.14	252.5	F		
T	2275	5176	0.89	0.44	51.6	D	93.6	F
R	710	1615	0.57	0.44	39.0	D		
Southbound								
L	154	3505	1.51	0.04	347.3	F		
T	1766	5176	1.08	0.34	104.4	F	129.1	F
R	551	1615	0.08	0.34	40.2	D		

Intersection Delay = 186.0 (sec/veh) Intersection LOS = F

HCS+: Signalized Intersections Release 5.2

Analyst:
Agency: Gresham Smith and Partners
Date: 1/23/2006
Period: A.M
Project ID: Optimized 6 Lanes
E/W St: Shelbyville Rd

Inter.: Shelbyville Rd/ 8 Mile Center
Area Type: All other areas
Jurisd:
Year : 2030
N/S St: 8 Mile Center

SIGNALIZED INTERSECTION SUMMARY

	Eastbound			Westbound			Northbound			Southbound		
	L	T	R	L	T	R	L	T	R	L	T	R
No. Lanes	1	3	0	1	3	1	0	1	0	1	1	0
LGConfig	L	TR		L	T	R		LTR		L	TR	
Volume	28	3160	6	6	3381	9	7	1	3	12	0	25
Lane Width	12.0	12.0		12.0	12.0	12.0		12.0		12.0	12.0	
RTOR Vol			0			0			0			0

Duration 0.25 Area Type: All other areas

Signal Operations

Phase Combination	1	2	3	4		5	6	7	8
EB Left	A				NB Left	A			
Thru		A			Thru	A			
Right		A			Right	A			
Peds					Peds				
WB Left	A				SB Left	A			
Thru		A			Thru	A			
Right		A			Right	A			
Peds					Peds	X			
NB Right					EB Right				
SB Right					WB Right				
Green	5.0	86.0			5.0				
Yellow	4.0	4.0			4.0				
All Red	0.0	1.0			1.0				

Cycle Length: 110.0 secs

Intersection Performance Summary

Appr/ Lane Grp	Lane Group Capacity	Adj Sat Flow Rate (s)	Ratios v/c	Ratios g/C	Lane Group Delay	Lane Group LOS	Approach Delay	Approach LOS
Eastbound								
L	82	1805	0.38	0.05	51.3	D		
TR	4045	5174	0.87	0.78	8.4	A	8.8	A
Westbound								
L	82	1805	0.09	0.05	50.3	D		
T	4047	5176	0.93	0.78	10.0+	B	10.1	B
R	1263	1615	0.01	0.78	2.6	A		
Northbound								
LTR	65	1436	0.18	0.05	51.9	D	51.9	D
Southbound								
L	69	1520	0.19	0.05	51.9	D		
TR	73	1615	0.38	0.05	54.3	D	53.6	D

Intersection Delay = 9.7 (sec/veh) Intersection LOS = A

HCS+: Signalized Intersections Release 5.2

Analyst:
Agency: Gresham Smith and Partners
Date: 1/23/2006
Period: P.M
Project ID: Optimization 6 Lanes
E/W St: Shelbyville Rd

Inter.: Shelbyville Rd/ 8 Mile Center
Area Type: All other areas
Jurisd:
Year : 2030
N/S St: 8 Mile Center

SIGNALIZED INTERSECTION SUMMARY

	Eastbound			Westbound			Northbound			Southbound		
	L	T	R	L	T	R	L	T	R	L	T	R
No. Lanes	1	3	0	1	3	1	0	1	0	1	1	0
LGConfig	L	TR		L	T	R		LTR		L	TR	
Volume	23	3079	0	2	3252	8	6	0	2	16	1	39
Lane Width	12.0	12.0		12.0	12.0	12.0		12.0		12.0	12.0	
RTOR Vol			0			0			0			0

Duration 0.25 Area Type: All other areas

Signal Operations

Phase Combination	1	2	3	4		5	6	7	8
EB Left	A				NB Left	A			
Thru		A			Thru	A			
Right		A			Right	A			
Peds					Peds				
WB Left	A				SB Left	A			
Thru		A			Thru	A			
Right		A			Right	A			
Peds					Peds	X			
NB Right					EB Right				
SB Right					WB Right				
Green	5.0	136.0			5.0				
Yellow	4.0	4.0			4.0				
All Red	0.0	1.0			1.0				

Cycle Length: 160.0 secs

Intersection Performance Summary

Appr/ Lane Grp	Lane Group Capacity	Adj Sat Flow Rate (s)	Ratios v/c	Ratios g/C	Lane Group Delay	Lane Group LOS	Approach Delay	Approach LOS
Eastbound								
L	56	1805	0.46	0.03	76.7	E		
TR	4400	5176	0.78	0.85	5.4	A	5.9	A
Westbound								
L	56	1805	0.04	0.03	75.2	E		
T	4400	5176	0.82	0.85	6.1	A	6.1	A
R	1373	1615	0.01	0.85	1.8	A		
Northbound								
LTR	41	1311	0.22	0.03	78.3	E	78.3	E
Southbound								
L	48	1520	0.38	0.03	80.8	F		
TR	51	1621	0.86	0.03	154.5	F	133.1	F

Intersection Delay = 7.2 (sec/veh) Intersection LOS = A

HCS+: Signalized Intersections Release 5.2

Analyst:
Agency: Gresham Smith and Partners
Date: 1/23/2006
Period: A.M
Project ID: Optimized 6 Lanes
E/W St: Shelbyville Rd

Inter.: Shelbyville Rd/ Christian Way
Area Type: All other areas
Jurisd:
Year : 2030
N/S St: Christian Way

SIGNALIZED INTERSECTION SUMMARY

	Eastbound			Westbound			Northbound			Southbound		
	L	T	R	L	T	R	L	T	R	L	T	R
No. Lanes	1	3	1	1	3	0	1	1	1	0	1	0
LGConfig	L	T	R	L	TR		L	LT	R		LTR	
Volume	10	3060	100	50	2630	10	160	10	40	10	10	10
Lane Width	12.0	12.0	12.0	12.0	12.0		12.0	12.0	12.0		12.0	
RTOR Vol			72			0			0			9

Duration 0.25 Area Type: All other areas

Signal Operations

Phase Combination	1	2	3	4		5	6	7	8
EB Left	A	A			NB Left	A			
Thru		A			Thru	A			
Right		A			Right	A			
Peds					Peds	X			
WB Left	A				SB Left	A			
Thru	A	A			Thru	A			
Right	A	A			Right	A			
Peds					Peds				
NB Right					EB Right				
SB Right					WB Right				
Green	6.0	78.0				12.0			
Yellow	4.0	4.0				4.0			
All Red	0.0	1.0				1.0			

Cycle Length: 110.0 secs

Intersection Performance Summary

Appr/ Lane Grp	Lane Group Capacity	Adj Sat Flow Rate (s)	Ratios v/c	Ratios g/C	Lane Group Delay	Lane Group LOS	Approach Delay	Approach LOS
Eastbound								
L	69	86	0.16	0.80	3.6	A		
T	3670	5176	0.93	0.71	18.3	B	18.2	B
R	1145	1615	0.03	0.71	4.8	A		
Westbound								
L	98	1805	0.57	0.05	58.5	E		
TR	4138	5173	0.71	0.80	5.7	A	6.6	A
Northbound								
L	154	1410	1.16	0.11	169.6	F		
LT	207	1900	0.05	0.11	44.0	D	140.2	F
R	176	1615	0.25	0.11	45.6	D		
Southbound								
LTR	182	1666	0.13	0.11	44.6	D	44.6	D

Intersection Delay = 17.4 (sec/veh) Intersection LOS = B

HCS+: Signalized Intersections Release 5.2

Analyst:
Agency: Gresham Smith and Partners
Date: 1/23/2006
Period: P.M
Project ID: Optimized 6 Lanes
E/W St: Shelbyville Rd

Inter.: Shelbyville Rd/ Christian Way
Area Type: All other areas
Jurisd:
Year : 2030
N/S St: Christian Way

SIGNALIZED INTERSECTION SUMMARY

	Eastbound			Westbound			Northbound			Southbound		
	L	T	R	L	T	R	L	T	R	L	T	R
No. Lanes	1	3	1	1	3	0	1	1	1	0	1	0
LGConfig	L	T	R	L	TR		L	LT	R		LTR	
Volume	10	2930	300	240	2980	10	370	10	300	20	10	10
Lane Width	12.0	12.0	12.0	12.0	12.0		12.0	12.0	12.0		12.0	
RTOR Vol			200			0			190			8

Duration 0.25 Area Type: All other areas

Signal Operations

Phase Combination	1	2	3	4		5	6	7	8
EB Left	A	A			NB Left	A			
Thru		A			Thru	A			
Right		A			Right	A			
Peds		X			Peds	X			
WB Left	A				SB Left	A			
Thru	A	A			Thru	A			
Right	A	A			Right	A			
Peds					Peds				
NB Right					EB Right				
SB Right					WB Right				
Green	16.9	102.4				26.7			
Yellow	4.0	4.0				4.0			
All Red	0.0	1.0				1.0			

Cycle Length: 160.0 secs

Intersection Performance Summary

Appr/ Lane Grp	Lane Group Capacity	Adj Sat Flow Rate (s)	Ratios v/c	Ratios g/C	Lane Group Delay	Lane Group LOS	Approach Delay	Approach LOS
Eastbound								
L	48	62	0.23	0.77	7.5	A		
T	3313	5176	0.98	0.64	39.8	D	38.8	D
R	1034	1615	0.11	0.64	11.2	B		
Westbound								
L	191	1805	1.40	0.11	279.2	F		
TR	3986	5173	0.83	0.77	13.4	B	33.2	C
Northbound								
L	235	1408	1.75	0.17	420.7	F		
LT	317	1900	0.03	0.17	55.9	E	332.7	F
R	270	1615	0.45	0.17	61.3	E		
Southbound								
LTR	267	1600	0.13	0.17	57.0	E	57.0	E

Intersection Delay = 57.4 (sec/veh) Intersection LOS = E

HCS+: Signalized Intersections Release 5.2

Analyst:
Agency: Gresham Smith and Partners
Date: 1/23/2006
Period: A.M
Project ID: Estimated 6 Lanes
E/W St: Shelbyville Rd

Inter.: Shelbyville Rd/ Dorsey Ln
Area Type: All other areas
Jurisd:
Year : 2030

N/S St: Dorsey Ln

SIGNALIZED INTERSECTION SUMMARY

	Eastbound			Westbound			Northbound			Southbound		
	L	T	R	L	T	R	L	T	R	L	T	R
No. Lanes	1	3	1	1	3	0	1	1	0	1	1	1
LGConfig	L	T	R	L	TR		L	TR		L	T	R
Volume	130	800	70	10	1240	490	10	10	10	480	40	460
Lane Width	12.0	12.0	12.0	12.0	12.0		12.0	12.0		12.0	12.0	12.0
RTOR Vol			27			26			7			163

Duration 0.25 Area Type: All other areas

Signal Operations

Phase Combination	1	2	3	4		5	6	7	8
EB Left	A	A			NB Left	A			
Thru	A	A			Thru	A			
Right	A	A			Right	A			
Peds	X	X			Peds	X			
WB Left		A			SB Left	A			
Thru		A			Thru	A			
Right		A			Right	A			
Peds		X			Peds	X			
NB Right					EB Right				
SB Right					WB Right				
Green	10.0	48.9			30.0				
Yellow	4.0	4.3			4.0				
All Red	0.0	1.0			1.0				

Cycle Length: 103.2 secs

Intersection Performance Summary

Appr/ Lane Grp	Lane Group Capacity	Adj Sat Flow Rate (s)	Ratios v/c	Ratios g/C	Lane Group Delay	Lane Group LOS	Approach Delay	Approach LOS
Eastbound								
L	249	1805	0.58	0.61	20.6	C		
T	3155	5176	0.28	0.61	9.5	A	11.0	B
R	984	1615	0.05	0.61	8.1	A		
Westbound								
L	277	584	0.04	0.47	14.6	B		
TR	2352	4964	0.81	0.47	25.2	C	25.2	C
Northbound								
L	402	1384	0.03	0.29	26.2	C		
TR	535	1839	0.03	0.29	26.2	C	26.2	C
Southbound								
L	413	1422	1.29	0.29	184.5	F		
T	552	1900	0.08	0.29	26.6	C	123.3	F
R	469	1615	0.70	0.29	37.4	D		

Intersection Delay = 44.0 (sec/veh) Intersection LOS = D

HCS+: Signalized Intersections Release 5.2

Analyst:
Agency: Gresham Smith and Partners
Date: 1/23/2006
Period: P.M
Project ID: Estimated 6 Lanes
E/W St: Shelbyville Rd

Inter.: Shelbyville Rd/ Dorsey Ln
Area Type: All other areas
Jurisd:
Year : 2030

N/S St: Dorsey Ln

SIGNALIZED INTERSECTION SUMMARY

	Eastbound			Westbound			Northbound			Southbound		
	L	T	R	L	T	R	L	T	R	L	T	R
No. Lanes	1	3	1	1	3	0	1	1	0	1	1	1
LGConfig	L	T	R	L	TR		L	TR		L	T	R
Volume	370	1430	40	40	1220	510	70	40	40	440	50	220
Lane Width	12.0	12.0	12.0	12.0	12.0		12.0	12.0		12.0	12.0	12.0
RTOR Vol			7			23			27			138

Duration 0.25 Area Type: All other areas

Signal Operations

Phase Combination	1	2	3	4		5	6	7	8
EB Left	A	A			NB Left	A			
Thru	A	A			Thru	A			
Right	A	A			Right	A			
Peds	X	X			Peds	X			
WB Left		A			SB Left	A			
Thru		A			Thru	A			
Right		A			Right	A			
Peds		X			Peds	X			
NB Right					EB Right				
SB Right					WB Right				
Green	30.0	60.4			30.0				
Yellow	4.0	4.3			4.0				
All Red	0.0	1.0			1.0				

Cycle Length: 134.7 secs

Intersection Performance Summary

Appr/ Lane Grp	Lane Group Capacity	Adj Sat Flow Rate (s)	Ratios v/c	Ratios g/C	Lane Group Delay	Lane Group LOS	Approach Delay	Approach LOS
Eastbound								
L	458	1805	0.90	0.70	62.2	E		
T	3627	5176	0.44	0.70	8.8	A	19.5	B
R	1132	1615	0.03	0.70	6.2	A		
Westbound								
L	125	279	0.35	0.45	26.0	C		
TR	2221	4954	0.85	0.45	36.7	D	36.5	D
Northbound								
L	305	1369	0.26	0.22	43.6	D		
TR	408	1831	0.14	0.22	42.2	D	43.0	D
Southbound								
L	304	1366	1.61	0.22	341.0	F		
T	423	1900	0.13	0.22	42.1	D	272.1	F
R	360	1615	0.25	0.22	43.5	D		

Intersection Delay = 60.9 (sec/veh) Intersection LOS = E

HCS+: Signalized Intersections Release 5.2

Analyst:
Agency: Gresham Smith and Partners
Date: 1/24/2006
Period: A.M
Project ID: Optimized 6 Lanes
E/W St: Shelbyville Rd

Inter.: Shelbyville Rd./ Hurstbourne
Area Type: All other areas
Jurisd:
Year : 2030
N/S St: Hurstbourne Pkwy

SIGNALIZED INTERSECTION SUMMARY

	Eastbound			Westbound			Northbound			Southbound		
	L	T	R	L	T	R	L	T	R	L	T	R
No. Lanes	2	3	1	2	3	0	2	2	1	2	2	1
LGConfig	L	T	R	L	TR		L	T	R	L	T	R
Volume	430	830	140	390	1240	170	260	1080	180	200	770	580
Lane Width	12.0	12.0	12.0	12.0	12.0		12.0	12.0	12.0	12.0	12.0	12.0
RTOR Vol			48			4			108			264

Duration 0.25 Area Type: All other areas

Signal Operations

Phase Combination	1	2	3	4	5	6	7	8
EB Left	A				NB Left A			
Thru		A			Thru	A		
Right		A			Right	A		
Peds		X			Peds	X		
WB Left	A				SB Left A			
Thru		A			Thru	A		
Right		A			Right	A		
Peds		X			Peds	X		
NB Right					EB Right			
SB Right					WB Right			
Green	39.6	51.6			17.4	45.9		
Yellow	4.0	4.5			5.0	5.0		
All Red	1.5	1.5			2.0	2.0		

Cycle Length: 180.0 secs

Intersection Performance Summary

Appr/ Lane Grp	Lane Group Capacity	Adj Sat Flow Rate (s)	Ratios v/c	Ratios g/C	Lane Group Delay	Lane Group LOS	Approach Delay	Approach LOS
Eastbound								
L	771	3505	0.62	0.22	64.9	E		
T	1484	5176	0.62	0.29	56.5	E	58.7	E
R	463	1615	0.22	0.29	49.1	D		
Westbound								
L	771	3505	0.56	0.22	63.4	E		
TR	1457	5084	1.07	0.29	109.7	F	99.7	F
Northbound								
L	339	3505	0.85	0.10	98.5	F		
T	923	3618	1.30	0.25	210.1	F	181.5	F
R	412	1615	0.19	0.25	52.8	D		
Southbound								
L	339	3505	0.65	0.10	82.9	F		
T	923	3618	0.93	0.25	80.5	F	80.6	F
R	412	1615	0.85	0.25	79.5	E		

Intersection Delay = 105.8 (sec/veh) Intersection LOS = F

HCS+: Signalized Intersections Release 5.2

Analyst:
Agency: Gresham Smith and Partners
Date: 1/24/2006
Period: P.M
Project ID: Optimized 6 Lanes
E/W St: Shelbyville Rd

Inter.: Shelbyville Rd./ Hurstbourne
Area Type: All other areas
Jurisd:
Year : 2030
N/S St: Hurstbourne Pkwy

SIGNALIZED INTERSECTION SUMMARY

	Eastbound			Westbound			Northbound			Southbound		
	L	T	R	L	T	R	L	T	R	L	T	R
No. Lanes	2	3	1	2	3	0	2	2	1	2	2	1
LGConfig	L	T	R	L	TR		L	T	R	L	T	R
Volume	450	1270	240	510	1120	180	510	1570	460	390	1000	380
Lane Width	12.0	12.0	12.0	12.0	12.0		12.0	12.0	12.0	12.0	12.0	12.0
RTOR Vol			54			5			190			246

Duration 0.25 Area Type: All other areas

Signal Operations

Phase Combination	1	2	3	4	5	6	7	8
EB Left	A				NB Left A			
Thru		A			Thru	A		
Right		A			Right	A		
Peds		X			Peds	X		
WB Left	A				SB Left A			
Thru		A			Thru	A		
Right		A			Right	A		
Peds		X			Peds	X		
NB Right					EB Right			
SB Right					WB Right			
Green	23.3	49.4			22.6	58.7		
Yellow	5.0	4.5			4.5	5.0		
All Red	2.0	1.5			1.5	2.0		

Cycle Length: 180.0 secs

Intersection Performance Summary

Appr/ Lane Grp	Lane Group Capacity	Adj Sat Flow Rate (s)	Ratios v/c	Ratios g/C	Lane Group Delay	Lane Group LOS	Approach Delay	Approach LOS
Eastbound								
L	454	3505	1.10	0.13	151.0	F		
T	1421	5176	0.99	0.27	87.3	F	99.2	F
R	443	1615	0.47	0.27	55.1	E		
Westbound								
L	454	3505	1.25	0.13	207.6	F		
TR	1392	5071	1.03	0.27	98.4	F	129.2	F
Northbound								
L	440	3505	1.29	0.13	224.8	F		
T	1180	3618	1.48	0.33	280.4	F	242.0	F
R	527	1615	0.57	0.33	51.7	D		
Southbound								
L	440	3505	0.98	0.13	117.1	F		
T	1180	3618	0.94	0.33	73.4	E	82.1	F
R	527	1615	0.28	0.33	45.3	D		

Intersection Delay = 147.2 (sec/veh) Intersection LOS = F

HCS+: Signalized Intersections Release 5.2

Analyst:
Agency: Gresham Smith and Partners
Date: 1/23/2006
Period: A.M
Project ID: Optimized 6 Lanes
E/W St: Shelbyville Rd

Inter.: Shelbyville Rd/ Lyndon Ln
Area Type: All other areas
Jurisd:
Year : 2030

N/S St: Lyndon Ln

SIGNALIZED INTERSECTION SUMMARY

	Eastbound			Westbound			Northbound			Southbound		
	L	T	R	L	T	R	L	T	R	L	T	R
No. Lanes	1	3	0	1	3	1	1	1	0	0	1	0
LGConfig	L	TR		L	T	R	L	TR			LTR	
Volume	90	2990	90	40	2780	120	320	90	50	350	120	90
Lane Width	12.0	12.0		12.0	12.0	12.0	12.0	12.0			12.0	
RTOR Vol			2			10			18			14

Duration 0.25 Area Type: All other areas

Signal Operations

Phase Combination	1	2	3	4	5	6	7	8
EB Left	A				NB Left	A		
Thru		A			Thru	A		
Right		A			Right	A		
Peds		X			Peds	X		
WB Left	A				SB Left	A		
Thru		A			Thru	A		
Right		A			Right	A		
Peds					Peds	X		
NB Right					EB Right			
SB Right					WB Right			
Green	5.0	65.1			24.9			
Yellow	4.0	4.0			4.0			
All Red	1.0	1.0			1.0			

Cycle Length: 110.0 secs

Intersection Performance Summary

Appr/ Lane Grp	Lane Group Capacity	Adj Sat Flow Rate (s)	Ratios v/c	Ratios g/C	Lane Group Delay	Lane Group LOS	Approach Delay	Approach LOS
Eastbound								
L	82	1805	1.22	0.05	222.2	F		
TR	3050	5153	1.12	0.59	82.0	F	86.0	F
Westbound								
L	82	1805	0.54	0.05	58.2	E		
T	3063	5176	1.01	0.59	40.8	D	39.9	D
R	956	1615	0.13	0.59	10.0-	A		
Northbound								
L	276	1220	1.29	0.23	197.4	F		
TR	413	1825	0.33	0.23	36.0	D	152.8	F
Southbound								
LTR	231	1019	2.62	0.23	785.5	F	785.5	F

Intersection Delay = 125.0 (sec/veh) Intersection LOS = F

HCS+: Signalized Intersections Release 5.2

Analyst:
Agency: Gresham Smith and Partners
Date: 1/23/2006
Period: P.M
Project ID: Optimized 6 Lanes
E/W St: Shelbyville Rd

Inter.: Shelbyville Rd/ Lyndon Ln
Area Type: All other areas
Jurisd:
Year : 2030

N/S St: Lyndon Ln

SIGNALIZED INTERSECTION SUMMARY

	Eastbound			Westbound			Northbound			Southbound		
	L	T	R	L	T	R	L	T	R	L	T	R
No. Lanes	1	3	0	1	3	1	1	1	0	0	1	0
LGConfig	L	TR		L	T	R	L	TR			LTR	
Volume	190	2980	160	40	2890	230	240	110	50	260	130	80
Lane Width	12.0	12.0		12.0	12.0	12.0	12.0	12.0			12.0	
RTOR Vol			3			14			12			6

Duration 0.25 Area Type: All other areas

Signal Operations

Phase Combination	1	2	3	4	5	6	7	8
EB Left	A				NB Left	A		
Thru		A			Thru	A		
Right		A			Right	A		
Peds		X			Peds	X		
WB Left	A				SB Left	A		
Thru		A			Thru	A		
Right		A			Right	A		
Peds					Peds	X		
NB Right					EB Right			
SB Right					WB Right			
Green	8.4	83.2			33.4			
Yellow	4.0	4.0			4.0			
All Red	1.0	1.0			1.0			

Cycle Length: 140.0 secs

Intersection Performance Summary

Appr/ Lane Grp	Lane Group Capacity	Adj Sat Flow Rate (s)	Ratios v/c	Ratios g/C	Lane Group Delay	Lane Group LOS	Approach Delay	Approach LOS
Eastbound								
L	108	1805	1.95	0.06	526.8	F		
TR	3053	5137	1.14	0.59	96.5	F	121.1	F
Westbound								
L	108	1805	0.41	0.06	65.9	E		
T	3076	5176	1.04	0.59	57.6	E	54.7	D
R	960	1615	0.25	0.59	13.7	B		
Northbound								
L	252	1056	1.06	0.24	126.6	F		
TR	436	1827	0.38	0.24	45.1	D	95.6	F
Southbound								
LTR	227	952	2.27	0.24	638.1	F	638.1	F

Intersection Delay = 123.9 (sec/veh) Intersection LOS = F

HCS+: Signalized Intersections Release 5.2

Analyst:
Agency: Gresham Smith and Partners
Date: 1/23/2006
Period: A.M
Project ID: Estimated 6 Lanes
E/W St: Shelbyville Rd

Inter.: Shelbyville / Whittington Pkwy
Area Type: All other areas
Jurisd:
Year : 2030

N/S St: Whittington Pkwy

SIGNALIZED INTERSECTION SUMMARY

	Eastbound			Westbound			Northbound			Southbound		
	L	T	R	L	T	R	L	T	R	L	T	R
No. Lanes	1	3	1	1	3	1	1	2	0	1	1	1
LGConfig	L	T	R	L	T	R	L	TR		L	T	R
Volume	375	1369	508	126	1954	120	60	45	31	46	10	83
Lane Width	12.0	12.0	12.0	12.0	12.0	12.0	12.0	12.0		12.0	12.0	12.0
RTOR Vol			150			0			27			0

Duration 0.25 Area Type: All other areas

Signal Operations

Phase Combination	1	2	3	4		5	6	7	8
EB Left	A	A			NB Left	A			
Thru		A			Thru	A			
Right		A			Right	A			
Peds		X			Peds	X			
WB Left	A	A			SB Left	A			
Thru		A			Thru	A			
Right		A			Right	A			
Peds		X			Peds	X			
NB Right					EB Right				
SB Right					WB Right				
Green	22.3	50.0				12.0			
Yellow	4.0	4.0				5.0			
All Red	1.0	1.0				1.0			

Cycle Length: 100.3 secs

Intersection Performance Summary

Appr/ Lane Grp	Lane Group Capacity	Adj Sat Flow Rate (s)	Ratios v/c	Ratios g/C	Lane Group Delay	Lane Group LOS	Approach Delay	Approach LOS
Eastbound								
L	477	1805	0.87	0.77	32.0	C		
T	2580	5176	0.59	0.50	17.9	B	20.2	C
R	805	1615	0.49	0.50	16.8	B		
Westbound								
L	498	1805	0.28	0.77	7.9	A		
T	2580	5176	0.84	0.50	24.4	C	22.9	C
R	805	1615	0.17	0.50	13.8	B		
Northbound								
L	171	1426	0.39	0.12	40.9	D		
TR	428	3577	0.13	0.12	39.5	D	40.3	D
Southbound								
L	164	1368	0.31	0.12	41.5	D		
T	227	1900	0.05	0.12	39.2	D	42.3	D
R	193	1615	0.48	0.12	43.1	D		

Intersection Delay = 22.7 (sec/veh) Intersection LOS = C

HCS+: Signalized Intersections Release 5.2

Analyst:
Agency: Gresham Smith and Partners
Date: 1/23/2006
Period: P.M
Project ID: Estimated 6 lanes
E/W St: Shelbyville Rd

Inter.: Shelbyville / Whittington Pkwy
Area Type: All other areas
Jurisd:
Year : 2030

N/S St: Whittington Pkwy

SIGNALIZED INTERSECTION SUMMARY

	Eastbound			Westbound			Northbound			Southbound		
	L	T	R	L	T	R	L	T	R	L	T	R
No. Lanes	1	3	1	1	3	1	1	1	0	1	1	1
LGConfig	L	T	R	L	T	R	L	TR		L	T	R
Volume	65	1796	253	68	1942	21	441	8	164	108	40	336
Lane Width	12.0	12.0	12.0	12.0	12.0	12.0	12.0	12.0		12.0	12.0	12.0
RTOR Vol			7			0			108			0

Duration 0.25 Area Type: All other areas

Signal Operations

Phase Combination	1	2	3	4		5	6	7	8
EB Left	A	A			NB Left	A			
Thru		A			Thru	A			
Right		A			Right	A			
Peds		X			Peds	X			
WB Left	A	A			SB Left	A			
Thru		A			Thru	A			
Right		A			Right	A			
Peds		X			Peds	X			
NB Right					EB Right				
SB Right					WB Right				
Green	5.0	56.8				42.2			
Yellow	4.0	4.0				5.0			
All Red	1.0	1.0				1.0			

Cycle Length: 120.0 secs

Intersection Performance Summary

Appr/ Lane Grp	Lane Group Capacity	Adj Sat Flow Rate (s)	Ratios v/c	Ratios g/C	Lane Group Delay	Lane Group LOS	Approach Delay	Approach LOS
Eastbound								
L	138	1805	0.52	0.56	24.2	C		
T	2450	5176	0.81	0.47	27.3	C	26.4	C
R	764	1615	0.36	0.47	20.1	C		
Westbound								
L	138	1805	0.55	0.56	26.6	C		
T	2450	5176	0.88	0.47	32.6	C	32.3	C
R	764	1615	0.03	0.47	16.9	B		
Northbound								
L	487	1384	1.01	0.35	52.6	D		
TR	581	1651	0.12	0.35	26.4	C	49.3	D
Southbound								
L	475	1350	0.25	0.35	28.0	C		
T	668	1900	0.07	0.35	25.9	C	33.1	C
R	568	1615	0.66	0.35	35.6	D		

Intersection Delay = 31.6 (sec/veh) Intersection LOS = C

HCS+: Signalized Intersections Release 5.2

Analyst:
Agency: Gresham Smith and Partners
Date: 1/24/2006
Period: A.M
Project ID: Optimized
E/W St: Taylorsville Rd

Inter.: Taylorsville Rd./ Hurstbourne
Area Type: All other areas
Jurisd:
Year : 2030
N/S St: Hurstbourne Pkwy

SIGNALIZED INTERSECTION SUMMARY

	Eastbound			Westbound			Northbound			Southbound		
	L	T	R	L	T	R	L	T	R	L	T	R
No. Lanes	2	3	1	1	3	1	2	2	1	2	2	1
LGConfig	L	T	R	L	T	R	L	T	R	L	T	R
Volume	760	70	30	100	1310	1520	250	2140	40	520	780	550
Lane Width	12.0	12.0	12.0	12.0	12.0	12.0	12.0	12.0	12.0	12.0	12.0	12.0
RTOR Vol			21			320			4			354

Duration 0.25 Area Type: All other areas

Signal Operations

Phase Combination	1	2	3	4		5	6	7	8
EB Left	A				NB Left	A			
Thru		A			Thru		A		
Right		A			Right		A		
Peds		X			Peds		X		
WB Left	A				SB Left	A			
Thru		A			Thru		A		
Right		A			Right		A		
Peds					Peds				
NB Right					EB Right				
SB Right					WB Right				
Green	23.2	54.3				16.0	60.5		
Yellow	4.5	5.0				4.5	5.0		
All Red	1.5	2.0				1.5	2.0		

Cycle Length: 180.0 secs

Intersection Performance Summary

Appr/ Lane Grp	Lane Group Capacity	Adj Sat Flow Rate (s)	Ratios v/c	Ratios g/C	Lane Group Delay	Lane Group LOS	Approach Delay	Approach LOS
Eastbound								
L	452	3505	1.87	0.13	477.1	F		
T	1561	5176	0.05	0.30	44.6	D	436.2	F
R	487	1615	0.02	0.30	44.2	D		
Westbound								
L	233	1805	0.48	0.13	74.3	E		
T	1561	5176	0.93	0.30	71.7	E	429.7	F
R	487	1615	2.74	0.30	850.4	F		
Northbound								
L	312	3505	0.89	0.09	106.8	F		
T	1216	3618	1.96	0.34	492.8	F	446.3	F
R	543	1615	0.07	0.34	40.7	D		
Southbound								
L	312	3505	1.85	0.09	477.8	F		
T	1216	3618	0.71	0.34	54.2	D	200.4	F
R	543	1615	0.40	0.34	46.3	D		

Intersection Delay = 389.3 (sec/veh) Intersection LOS = F

HCS+: Signalized Intersections Release 5.2

Analyst:
Agency: Gresham Smith and Partners
Date: 1/24/2006
Period: P.M
Project ID: Optimized
E/W St: Taylorsville Rd

Inter.: Taylorsville Rd/Hurstbourne Pk
Area Type: All other areas
Jurisd:
Year : 2030
N/S St: Hurstbourne Pkwy

SIGNALIZED INTERSECTION SUMMARY

	Eastbound			Westbound			Northbound			Southbound		
	L	T	R	L	T	R	L	T	R	L	T	R
No. Lanes	2	3	1	1	3	1	2	2	1	2	2	1
LGConfig	L	T	R	L	T	R	L	T	R	L	T	R
Volume	660	1090	110	290	990	910	230	1140	210	1440	2180	1340
Lane Width	12.0	12.0	12.0	12.0	12.0	12.0	12.0	12.0	12.0	12.0	12.0	12.0
RTOR Vol			48			368			40			390

Duration 0.25 Area Type: All other areas

Signal Operations

Phase Combination	1	2	3	4		5	6	7	8
EB Left	A				NB Left	A			
Thru		A			Thru		A		
Right		A			Right		A		
Peds		X			Peds		X		
WB Left	A				SB Left	A			
Thru		A			Thru		A		
Right		A			Right		A		
Peds					Peds				
NB Right					EB Right				
SB Right					WB Right				
Green	18.8	36.3				26.7	72.2		
Yellow	4.5	5.0				4.5	5.0		
All Red	1.5	2.0				1.5	2.0		

Cycle Length: 180.0 secs

Intersection Performance Summary

Appr/ Lane Grp	Lane Group Capacity	Adj Sat Flow Rate (s)	Ratios v/c	Ratios g/C	Lane Group Delay	Lane Group LOS	Approach Delay	Approach LOS
Eastbound								
L	366	3505	2.00	0.10	541.4	F		
T	1044	5176	1.16	0.20	154.7	F	292.3	F
R	326	1615	0.21	0.20	60.2	E		
Westbound								
L	189	1805	1.70	0.10	418.9	F		
T	1044	5176	1.05	0.20	115.0	F	267.3	F
R	326	1615	1.85	0.20	464.5	F		
Northbound								
L	520	3505	0.49	0.15	71.2	E		
T	1451	3618	0.87	0.40	55.9	E	56.0	E
R	648	1615	0.29	0.40	36.8	D		
Southbound								
L	520	3505	3.08	0.15	1016	F		
T	1451	3618	1.67	0.40	358.1	F	562.6	F
R	648	1615	1.63	0.40	344.2	F		

Intersection Delay = 377.0 (sec/veh) Intersection LOS = F

HCS+: Signalized Intersections Release 5.2

Analyst:
Agency: Gresham Smith and Partners
Date: 1/24/2006
Period: A.M
Project ID: Estimated
E/W St: Westport Rd

Inter.: Westport Rd./ Hurstbourne
Area Type: All other areas
Jurisd:
Year : 2030
N/S St: Hurstbourne Pkwy

SIGNALIZED INTERSECTION SUMMARY

	Eastbound			Westbound			Northbound			Southbound		
	L	T	R	L	T	R	L	T	R	L	T	R
No. Lanes	2	2	1	2	2	1	1	2	1	2	2	1
LGConfig	L	T	R	L	T	R	L	T	R	L	T	R
Volume	120	400	330	710	620	170	160	340	300	120	810	180
Lane Width	12.0	12.0	12.0	12.0	12.0	12.0	12.0	12.0	12.0	12.0	12.0	12.0
RTOR Vol			148			110			205			78

Duration 0.25 Area Type: All other areas

Signal Operations

Phase Combination	1	2	3	4		5	6	7	8
EB Left	A				NB Left	A	A		
Thru			A		Thru		A	A	
Right			A		Right		A	A	
Peds			X		Peds		X	X	
WB Left	A	A			SB Left	A			
Thru		A	A		Thru			A	
Right		A	A		Right			A	
Peds		X	X		Peds			X	
NB Right					EB Right				
SB Right					WB Right				
Green	9.2	5.8	22.1			8.9	1.0	37.0	
Yellow	4.0	4.3	4.3			4.5	4.5	4.5	
All Red	1.0	1.0	2.0			1.0	2.0	1.0	

Cycle Length: 118.1 secs

Intersection Performance Summary

Appr/ Lane Grp	Lane Group Capacity	Adj Sat Flow Rate (s)	Ratios v/c	Ratios g/C	Lane Group Delay	Lane Group LOS	Approach Delay	Approach LOS
Eastbound								
L	273	3505	0.49	0.08	53.6	D		
T	677	3618	0.66	0.19	46.8	D	48.8	D
R	302	1615	0.67	0.19	50.2	D		
Westbound								
L	594	3505	1.33	0.17	208.2	F		
T	1017	3618	0.68	0.28	39.5	D	125.3	F
R	454	1615	0.15	0.28	32.0	C		
Northbound								
L	235	1805	0.76	0.13	62.8	E		
T	1363	3618	0.28	0.38	25.7	C	35.5	D
R	609	1615	0.17	0.38	24.7	C		
Southbound								
L	264	3505	0.50	0.08	54.0	D		
T	1133	3618	0.79	0.31	41.1	D	41.5	D
R	506	1615	0.22	0.31	30.2	C		

Intersection Delay = 73.3 (sec/veh) Intersection LOS = E

HCS+: Signalized Intersections Release 5.2

Analyst:
Agency: Gresham Smith and Partners
Date: 1/24/2006
Period: P.M
Project ID: Estimated
E/W St: Westport Rd

Inter.: Westport Rd./ Hurstbourne
Area Type: All other areas
Jurisd:
Year : 2030
N/S St: Hurstbourne Pkwy

SIGNALIZED INTERSECTION SUMMARY

	Eastbound			Westbound			Northbound			Southbound		
	L	T	R	L	T	R	L	T	R	L	T	R
No. Lanes	2	2	1	2	2	1	1	2	1	2	2	1
LGConfig	L	T	R	L	T	R	L	T	R	L	T	R
Volume	210	770	310	530	720	210	370	1040	1030	220	650	180
Lane Width	12.0	12.0	12.0	12.0	12.0	12.0	12.0	12.0	12.0	12.0	12.0	12.0
RTOR Vol			197			122			336			106

Duration 0.25 Area Type: All other areas

Signal Operations

Phase Combination	1	2	3	4		5	6	7	8
EB Left	A				NB Left	A	A		
Thru			A		Thru		A	A	
Right			A		Right		A	A	
Peds			X		Peds		X	X	
WB Left	A	A			SB Left	A			
Thru		A	A		Thru			A	
Right		A	A		Right			A	
Peds		X	X		Peds			X	
NB Right					EB Right				
SB Right					WB Right				
Green	12.5	7.5	40.0			13.0	7.0	36.5	
Yellow	4.0	4.3	4.3			4.0	4.5	4.5	
All Red	1.0	1.0	2.0			1.0	2.0	2.0	

Cycle Length: 151.1 secs

Intersection Performance Summary

Appr/ Lane Grp	Lane Group Capacity	Adj Sat Flow Rate (s)	Ratios v/c	Ratios g/C	Lane Group Delay	Lane Group LOS	Approach Delay	Approach LOS
Eastbound								
L	290	3505	0.80	0.08	83.1	F		
T	958	3618	0.89	0.26	64.2	E	65.8	E
R	428	1615	0.29	0.26	44.7	D		
Westbound								
L	580	3505	1.02	0.17	104.4	F		
T	1264	3618	0.63	0.35	42.1	D	66.2	E
R	564	1615	0.17	0.35	34.2	C		
Northbound								
L	299	1805	1.37	0.17	251.4	F		
T	1197	3618	0.97	0.33	68.0	E	163.8	F
R	534	1615	1.44	0.33	260.7	F		
Southbound								
L	302	3505	0.81	0.09	82.8	F		
T	874	3618	0.83	0.24	60.9	E	64.8	E
R	390	1615	0.21	0.24	46.1	D		

Intersection Delay = 103.4 (sec/veh) Intersection LOS = F

HCS+: Signalized Intersections Release 5.2

Analyst:
Agency: Gresham Smith and Partners
Date: 1/23/2006
Period: A.M
Project ID: Optimized
E/W St: Whittington Pkwy

Inter.: Whittington Pkwy / Hurstbourne
Area Type: All other areas
Jurisd:
Year : 2030

N/S St: Hurstbourne Pkwy

SIGNALIZED INTERSECTION SUMMARY

	Eastbound			Westbound			Northbound			Southbound		
	L	T	R	L	T	R	L	T	R	L	T	R
No. Lanes	0	1	1	0	1	1	2	3	0	1	3	1
LGConfig		LT	R		LT	R	L	TR		L	T	R
Volume	46	15	184	31	15	26	266	1448	15	5	1059	236
Lane Width		12.0	12.0		12.0	12.0	12.0	12.0		12.0	12.0	12.0
RTOR Vol			0			22			10			110

Duration 0.25 Area Type: All other areas

Signal Operations

Phase Combination	1	2	3	4		5	6	7	8
EB Left	A				NB Left	A	A		
Thru	A				Thru		A	A	
Right	A				Right		A	A	
Peds	X				Peds				
WB Left	A				SB Left	A			
Thru	A				Thru			A	
Right	A				Right			A	
Peds					Peds				
NB Right					EB Right				
SB Right					WB Right				
Green	30.6					4.0	18.2	103.2	
Yellow	4.5					4.5	4.5	4.5	
All Red	1.5					1.5	1.5	1.5	

Cycle Length: 180.0 secs

Intersection Performance Summary

Appr/ Lane Grp	Lane Group Capacity	Adj Sat Flow Rate (s)	Ratios v/c	Ratios g/C	Lane Group Delay	Lane Group LOS	Approach Delay	Approach LOS
Eastbound								
LT	241	1419	0.28	0.17	65.8	E	77.4	E
R	275	1615	0.74	0.17	81.3	F		
Westbound								
LT	251	1477	0.20	0.17	64.6	E	64.4	E
R	275	1615	0.01	0.17	62.2	E		
Northbound								
L	549	3505	0.54	0.16	71.0	E		
TR	3661	5173	0.44	0.71	11.3	B	20.5	C
Southbound								
L	40	1805	0.15	0.02	88.1	F		
T	2968	5176	0.40	0.57	21.3	C	21.2	C
R	926	1615	0.15	0.57	18.0	B		

Intersection Delay = 25.8 (sec/veh) Intersection LOS = C

HCS+: Signalized Intersections Release 5.2

Analyst:
Agency: Gresham Smith and Partners
Date: 1/23/2006
Period: P.M
Project ID: Optimized
E/W St: Whittington Pkwy

Inter.: Whittington Pkwy / Hurstbourne
Area Type: All other areas
Jurisd:
Year : 2030

N/S St: Hurstbourne Pkwy

SIGNALIZED INTERSECTION SUMMARY

	Eastbound			Westbound			Northbound			Southbound		
	L	T	R	L	T	R	L	T	R	L	T	R
No. Lanes	0	1	1	0	1	1	2	3	0	1	3	1
LGConfig		LT	R		LT	R	L	TR		L	T	R
Volume	302	20	461	46	26	20	179	2217	31	15	1601	133
Lane Width		12.0	12.0		12.0	12.0	12.0	12.0		12.0	12.0	12.0
RTOR Vol			36			3			1			39

Duration 0.25 Area Type: All other areas

Signal Operations

Phase Combination	1	2	3	4		5	6	7	8
EB Left	A				NB Left	A	A		
Thru	A				Thru		A	A	
Right	A				Right		A	A	
Peds	X				Peds				
WB Left	A				SB Left	A			
Thru	A				Thru			A	
Right	A				Right			A	
Peds					Peds				
NB Right					EB Right				
SB Right					WB Right				
Green	57.2					4.7	4.2	89.9	
Yellow	4.5					4.5	4.5	4.5	
All Red	1.5					1.5	1.5	1.5	

Cycle Length: 180.0 secs

Intersection Performance Summary

Appr/ Lane Grp	Lane Group Capacity	Adj Sat Flow Rate (s)	Ratios v/c	Ratios g/C	Lane Group Delay	Lane Group LOS	Approach Delay	Approach LOS
Eastbound								
LT	412	1295	0.87	0.32	75.6	E	78.8	E
R	513	1615	0.92	0.32	81.2	F		
Westbound								
LT	255	804	0.31	0.32	47.2	D	46.3	D
R	513	1615	0.04	0.32	42.4	D		
Northbound								
L	290	3505	0.69	0.08	80.9	F		
TR	2872	5165	0.87	0.56	34.6	C	38.0	D
Southbound								
L	47	1805	0.36	0.03	86.6	F		
T	2585	5176	0.69	0.50	34.4	C	34.3	C
R	807	1615	0.13	0.50	24.1	C		

Intersection Delay = 43.0 (sec/veh) Intersection LOS = D

HCS+: Unsignalized Intersections Release 5.2

TWO-WAY STOP CONTROL SUMMARY

Analyst:
Agency/Co.: Gresham Smith and Partners
Date Performed: 1/27/2006
Analysis Time Period: A.M
Intersection: Shelbyville/ Whipps Mill Rd
Jurisdiction:
Units: U. S. Customary
Analysis Year: 2030
Project ID:
East/West Street: Shelbyville Rd.
North/South Street: Whipps Mill Rd
Intersection Orientation: EW Study period (hrs): 0.25

Vehicle Volumes and Adjustments

Major Street: Approach	Eastbound			Westbound		
Movement	1	2	3	4	5	6
	L	T	R	L	T	R
Volume	60	2980	80	10	2990	10
Peak-Hour Factor, PHF	1.00	1.00	1.00	1.00	1.00	1.00
Hourly Flow Rate, HFR	60	2980	80	10	2990	10
Percent Heavy Vehicles	0	--	--	0	--	--
Median Type/Storage	TWLTL			/ 1		
RT Channelized?						No
Lanes	1	2	0	1	2	1
Configuration	L	T	TR	L	T	R
Upstream Signal?		Yes			Yes	

Minor Street: Approach	Northbound			Southbound		
Movement	7	8	9	10	11	12
	L	T	R	L	T	R
Volume	10	10	30	10	10	580
Peak Hour Factor, PHF	1.00	1.00	1.00	1.00	1.00	1.00
Hourly Flow Rate, HFR	10	10	30	10	10	580
Percent Heavy Vehicles	0	0	0	0	0	0
Percent Grade (%)		0			0	
Flared Approach: Exists?/Storage			No /			/
Lanes	0	1	0	0	1	1
Configuration		LTR		LT		R

Delay, Queue Length, and Level of Service

Approach	EB	WB	Northbound			Southbound		
Movement	1	4	7	8	9	10	11	12
Lane Config	L	L		LTR		LT		R
v (vph)	60	10		50		20		580
C(m) (vph)	42	34						395
v/c	1.43	0.29						1.47
95% queue length	6.00	0.95						30.30
Control Delay	440.9	150.1						250.4
LOS	F	F						F
Approach Delay								
Approach LOS								

HCS+: Unsignalized Intersections Release 5.2

TWO-WAY STOP CONTROL SUMMARY

Analyst:
Agency/Co.: Gresham Smith and Partners
Date Performed: 1/27/2006
Analysis Time Period: P.M
Intersection: Shelbyville/ Whipps Mill Rd
Jurisdiction:
Units: U. S. Customary
Analysis Year: 2030
Project ID:
East/West Street: Shelbyville Rd.
North/South Street: Whipps Mill Rd
Intersection Orientation: EW Study period (hrs): 0.25

Vehicle Volumes and Adjustments

Major Street: Approach	Eastbound			Westbound		
Movement	1	2	3	4	5	6
	L	T	R	L	T	R
Volume	450	2460	40	10	2830	20
Peak-Hour Factor, PHF	1.00	1.00	1.00	1.00	1.00	1.00
Hourly Flow Rate, HFR	450	2460	40	10	2830	20
Percent Heavy Vehicles	0	--	--	0	--	--
Median Type/Storage	TWLTL			/ 1		
RT Channelized?						No
Lanes	1	2	0	1	2	1
Configuration	L	T	TR	L	T	R
Upstream Signal?		Yes			Yes	

Minor Street: Approach	Northbound			Southbound		
Movement	7	8	9	10	11	12
	L	T	R	L	T	R
Volume	10	10	10	10	10	490
Peak Hour Factor, PHF	1.00	1.00	1.00	1.00	1.00	1.00
Hourly Flow Rate, HFR	10	10	10	10	10	490
Percent Heavy Vehicles	0	0	0	0	0	0
Percent Grade (%)		0			0	
Flared Approach: Exists?/Storage			No /			/
Lanes	0	1	0	0	1	1
Configuration		LTR		LT		R

Delay, Queue Length, and Level of Service

Approach	EB	WB	Northbound			Southbound		
Movement	1	4	7	8	9	10	11	12
Lane Config	L	L		LTR		LT		R
v (vph)	450	10		30		20		490
C(m) (vph)	57	154						338
v/c	7.89	0.06						1.45
95% queue length	52.35	0.21						26.05
Control Delay	3241	30.0						247.9
LOS	F	D						F
Approach Delay								
Approach LOS								

HCS+: Unsignalized Intersections Release 5.2

TWO-WAY STOP CONTROL SUMMARY

Analyst:
Agency/Co.: Gresham Smith and Partners
Date Performed: 1/24/2006
Analysis Time Period: A.M.
Intersection: Shelbyville Rd/ Blue Ridge Ma
Jurisdiction:
Units: U. S. Customary
Analysis Year: 2030
Project ID:
East/West Street: Shelbyville Rd
North/South Street: Blue Ridge Manor
Intersection Orientation: EW Study period (hrs): 0.25

Vehicle Volumes and Adjustments

Major Street: Approach	Eastbound			Westbound		
Movement	1	2	3	4	5	6
	L	T	R	L	T	R
Volume	0	983	8	7	1703	0
Peak-Hour Factor, PHF	1.00	1.00	1.00	1.00	1.00	1.00
Hourly Flow Rate, HFR	0	983	8	7	1703	0
Percent Heavy Vehicles	0	--	--	0	--	--
Median Type/Storage	TWLTL			/ 1		
RT Channelized?			No			
Lanes	1	2	1	1	2	0
Configuration	L	T	R	L	T	TR
Upstream Signal?		Yes			Yes	

Minor Street: Approach	Northbound			Southbound		
Movement	7	8	9	10	11	12
	L	T	R	L	T	R
Volume	17		17			
Peak Hour Factor, PHF	1.00		1.00			
Hourly Flow Rate, HFR	17		17			
Percent Heavy Vehicles	0		0			
Percent Grade (%)		0			0	
Flared Approach: Exists?/Storage			/			/
Lanes	1		1			
Configuration	L		R			

Delay, Queue Length, and Level of Service

Approach	EB	WB	Northbound			Southbound		
Movement	1	4	7	8	9	10	11	12
Lane Config	L	L	L		R			
v (vph)	0	7	17		17			
C(m) (vph)		868			873			
v/c		0.01			0.02			
95% queue length		0.02			0.06			
Control Delay		9.2			9.2			
LOS		A			A			
Approach Delay								
Approach LOS								

HCS+: Unsignalized Intersections Release 5.2

TWO-WAY STOP CONTROL SUMMARY

Analyst: Anthony Lewis
Agency/Co.: Gresham Smith and Partners
Date Performed: 1/24/2006
Analysis Time Period: P.M.
Intersection: Shelbyville Rd/ Blue Ridge Ma
Jurisdiction:
Units: U. S. Customary
Analysis Year: 2030
Project ID:
East/West Street: Shelbyville Rd
North/South Street: Blue Ridge Manor
Intersection Orientation: EW Study period (hrs): 0.25

Vehicle Volumes and Adjustments

Major Street: Approach	Eastbound			Westbound		
Movement	1	2	3	4	5	6
	L	T	R	L	T	R
Volume	0	1817	23	27	1483	0
Peak-Hour Factor, PHF	1.00	1.00	1.00	1.00	1.00	1.00
Hourly Flow Rate, HFR	0	1817	23	27	1483	0
Percent Heavy Vehicles	0	--	--	0	--	--
Median Type/Storage	TWLTL			/ 1		
RT Channelized?			No			
Lanes	1	2	1	1	2	0
Configuration	L	T	R	L	T	TR
Upstream Signal?		Yes			Yes	

Minor Street: Approach	Northbound			Southbound		
Movement	7	8	9	10	11	12
	L	T	R	L	T	R
Volume	11		23			
Peak Hour Factor, PHF	1.00		1.00			
Hourly Flow Rate, HFR	11		23			
Percent Heavy Vehicles	0		0			
Percent Grade (%)		0			0	
Flared Approach: Exists?/Storage			/			/
Lanes	1		1			
Configuration	L		R			

Delay, Queue Length, and Level of Service

Approach	EB	WB	Northbound			Southbound		
Movement	1	4	7	8	9	10	11	12
Lane Config	L	L	L		R			
v (vph)	0	27	11		23			
C(m) (vph)		366			754			
v/c		0.07			0.03			
95% queue length		0.24			0.09			
Control Delay		15.6			9.9			
LOS		C			A			
Approach Delay								
Approach LOS								

HCS+: Unsignalized Intersections Release 5.2

TWO-WAY STOP CONTROL SUMMARY

Analyst:
Agency/Co.: Gresham Smith and Partners
Date Performed: 1/23/2006
Analysis Time Period: A.M
Intersection: Tamarisk Pkwy / Hurstbourne
Jurisdiction:
Units: U. S. Customary
Analysis Year: 2030
Project ID:
East/West Street: Tamarisk Pkwy
North/South Street: Hurstbourne Pkwy
Intersection Orientation: NS Study period (hrs): 0.25

Vehicle Volumes and Adjustments

Major Street: Approach	Northbound			Southbound		
Movement	1	2	3	4	5	6
	L	T	R	L	T	R
Volume	2	1039	10	9	1499	3
Peak-Hour Factor, PHF	1.00	1.00	1.00	1.00	1.00	1.00
Hourly Flow Rate, HFR	2	1039	10	9	1499	3
Percent Heavy Vehicles	0	--	--	0	--	--
Median Type/Storage	Raised curb / 1					
RT Channelized?			No			
Lanes	1	2	1	1	2	0
Configuration	L	T	R	L	T	TR
Upstream Signal?		Yes			Yes	

Minor Street: Approach	Westbound			Eastbound		
Movement	7	8	9	10	11	12
	L	T	R	L	T	R
Volume	70	0	46	1	0	0
Peak Hour Factor, PHF	1.00	1.00	1.00	1.00	1.00	1.00
Hourly Flow Rate, HFR	70	0	46	1	0	0
Percent Heavy Vehicles	0	0	0	0	0	0
Percent Grade (%)		0			0	
Flared Approach: Exists?/Storage			No /			Yes /1
Lanes	1	1	0	0	1	0
Configuration	L		TR		LTR	

Delay, Queue Length, and Level of Service

Approach	NB	SB	Westbound			Eastbound		
Movement	1	4	7	8	9	10	11	12
Lane Config	L	L	L		TR		LTR	
v (vph)	2	9	70		46		1	
C(m) (vph)	452	1054	253		703			
v/c	0.00	0.01	0.28		0.07			
95% queue length	0.01	0.03	1.10		0.21			
Control Delay	13.0	8.4	24.6		10.5		39.0	
LOS	B	A	C		B			
Approach Delay				19.0			39.0	
Approach LOS				C			E	

HCS+: Unsignalized Intersections Release 5.2

TWO-WAY STOP CONTROL SUMMARY

Analyst:
Agency/Co.: Gresham Smith and Partners
Date Performed: 1/23/2006
Analysis Time Period: P.M
Intersection: Tamarisk Pkwy / Hurstbourne
Jurisdiction:
Units: U. S. Customary
Analysis Year: 2030
Project ID:
East/West Street: Tamarisk Pkwy
North/South Street: Hurstbourne Pkwy
Intersection Orientation: NS Study period (hrs): 0.25

Vehicle Volumes and Adjustments

Major Street: Approach	Northbound			Southbound		
Movement	1	2	3	4	5	6
	L	T	R	L	T	R
Volume	6	1415	58	56	1117	0
Peak-Hour Factor, PHF	1.00	1.00	1.00	1.00	1.00	1.00
Hourly Flow Rate, HFR	6	1415	58	56	1117	0
Percent Heavy Vehicles	0	--	--	0	--	--
Median Type/Storage	Raised curb / 1					
RT Channelized?			Yes			
Lanes	1	2	1	1	2	0
Configuration	L	T	R	L	T	TR
Upstream Signal?		Yes			Yes	

Minor Street: Approach	Westbound			Eastbound		
Movement	7	8	9	10	11	12
	L	T	R	L	T	R
Volume	27	0	42	4	0	14
Peak Hour Factor, PHF	1.00	1.00	1.00	1.00	1.00	1.00
Hourly Flow Rate, HFR	27	0	42	4	0	14
Percent Heavy Vehicles	0	0	0	0	0	0
Percent Grade (%)		0			0	
Flared Approach: Exists?/Storage			No /			Yes /1
Lanes	1	1	0	0	1	0
Configuration	L		TR		LTR	

Delay, Queue Length, and Level of Service

Approach	NB	SB	Westbound			Eastbound		
Movement	1	4	7	8	9	10	11	12
Lane Config	L	L	L		TR		LTR	
v (vph)	6	56	27		42		18	
C(m) (vph)		615						
v/c		0.09						
95% queue length		0.30						
Control Delay		11.4						
LOS		B						
Approach Delay								
Approach LOS								